# SUNDANCE, HOST ATTACHED, LOUVERED ROOF PERGOLA
## GENERAL PERFORMANCE EVALUATION - FOR RESIDENTIAL USE ONLY

TO BE USED ALONG WITH A DESIGN PROFESSIONAL'S SITE SPECIFIC EVALUATION & CERTIFICATION FOR PERMIT.
NO CERTIFICATION IS OFFERED FOR USE WITHOUT A SITE SPECIFIC PLAN UNDER SEPARATE CERTIFICATION

**HIGH WIND LOADING:** LOCAL DESIGN CONDITIONS NOT TO EXCEED THE FOLLOWING:
**ULT WIND SPEED**: 170 MPH; **EXPOSURE CATEGORY**: C; **GROUND SNOW LOAD**: 10 PSF

SPACE RESERVED FOR DIGITAL SEAL INFORMATION

WHEN DIGITALLY SEALED, THIS NOTE SHALL BE FULLY COVERED ON SHEET 1

WHEN PRINTED OR PHYSICALLY SEALED, SEAL OF CERTIFYING ENGINEER, AND DATE OF CERTIFICATION SHALL BE SHOWN TO THE RIGHT.

IN ALL CASES, CERTIFYING ENGINEER AND CERT OF AUTH AS LISTED ON STAMP

PE SEAL REQUIRED

COPIES NOT VALID FOR PERMIT

**THIS SUBMITTAL IS FOR STRUCTURAL PURPOSES ONLY.** THIS PRODUCT SHALL BE CONSTRUCTED USING PARTS MANUFACTURED BY **"SUNDANCE LOUVERED ROOFS, LLC".** ALL NON-STRUCTURAL ELECTRICAL / MECHANICAL UNITS AND COMPONENTS SHALL BE INSTALLED AS PER THE MANUFACTURER'S RECOMMENDATIONS. ANY INFORMATION NOT REFERENCED HEREIN SHALL FOLLOW MANUFACTURER'S SPECIFICATIONS FOR THIS PRODUCT.

PROJECT PARTS TAKEOFF & SCHEDULE PROVIDED BY THE MANUFACTURER MAY NOT MATCH THE INFORMATION DETAILED HEREIN. MATERIAL TAKEOFF & COORDINATION SHALL NOT BE THE RESPONSIBILITY OF THE SIGNING ENGINEER. IT IS THE RESPONSIBILITY OF THE INSTALLING CONTRACTOR TO CONFIRM THE MATERIALS, HARDWARE, AND ANY REQUIRED CONNECTION ANCHORS USED FOR INSTALLATION MATCH THE INFORMATION SHOWN HEREIN BEFORE INSTALLATION BEGINS. REFER THE PROJECT INFORMATION BLOCK PROVIDED ABOVE FOR A QUICK REFERENCE OF PROJECT STYLE & MATERIAL REQUIREMENTS.

### SCOPE OF WORK:

DESIGN & INSTALLATION OF A NEW HOST-ATTACHED, MECHANICALLY OPERATED LOUVERED ROOF , RESIDENTIAL, SUNDANCE PERGOLA OR PATIO COVER AS DETAILED HEREIN

**EXCLUSIONS:**

THE DESIGN OF ANY EXISTING HOST STRUCTURE, MECHANICAL ELEMENTS, EGRESS, WATERPROOFING ELECTRICAL, WIRING, FAN BEAMS, FANS, OR ANY ACCESSORY ATTACHMENTS ARE NOT INCLUDED WITH THIS DESIGN OR CERTIFICATION U.N.O

### PROJECT INFORMATION:

PERGOLA STYLE: SUNDANCE HOST ATTACHED
ROOF TYPE: MECHANICALLY OPERATED LOUVERS
STRUCTURE SUPPORT: HOSY ATTACHED
BASE CONNECTION: SURFACE MOUNTED BASEPLATE, CLIPS, OR EMBEDED POST TO ISOLATED CONCRETE FOOTING OR REINFORCED CONCRETE SLAB
HOST ATTACHMENT: LEDGER BEAM TO EXISTING WOOD, CONCRETE, OR CMU HOST STRUCTURE

### DESIGN CRITERIA: HIGH WIND LOADING

INTERNATIONAL BUILDING CODE (2018)
CURRENT STATE BUILDING CODE (REFERENCED STATE CODES PER NOTES ON FOLLOWING SHEET)
ASCE 7-16 LOAD COMBINATIONS

| | | |
|---|---|---|
| 1. | DEAD LOADING | |
| 1.1. | ROOF DEAD LOAD | 5 PSF |
| 2. | LIVE LOADING | |
| 2.1. | ROOF LIVE LOAD | 20 PSF |
| 3. | WIND LOADING INPUTS | |
| 3.1. | METHODOLOGY | OPEN STRUCTURE |
| 3.2. | ULTIMATE WIND SPEED | UP TO 170 MPH |
| 3.3. | | (ASD = SQRT(O.6)*Vult) |
| 3.4. | WIND EXPOSURE FACTOR | C |
| 3.5. | WIND RISK CATEGORY | II |
| 3.6. | DIRECTIONALITY/OTHER FACTORS | Kd=0.85,G=0.85, Kz=0.85, Kzt=1.0 |
| 3.7. | MEAN ROOF HEIGHT | 8 FT TO 12 FT |
| 3.8. | SYSTEM MOUNTING HEIGHT | 0 FT (AT GRADE) |
| 4. | SNOW LOADING | |
| 4.1. | GROUND SNOW LOAD | UP TO 10 PSF |
| 4.2. | SNOW EXPOSURE FACTOR | 1.0 |
| 4.3. | SNOW LOAD IMPORTANCE FACTOR | 1.0 |
| 4.4. | THERMAL FACTOR | 1.2 |
| 4.5. | SNOW DRIFT | PER CODE FOR HOST ATTACHED STRUCTURES |
| 5. | SEISMIC LOADS (NOT TO CONTROL) | |
| 5.1. | RISK CATEGORY | II |
| 5.2. | SITE CLASS | D |
| 5.3. | SEISMIC DESIGN CATEGORY (SDC) | UP TO C |
| 5.4. | SEISMIC LOADING DOES NOT CONTROL DESIGN | |
| 6. | RESULTANT MAIN WIND FORCE RESISTING SYSTEM ASD DESIGN LOAD COMBINATIONS | |
| 6.1. | GRAVITY (+) | 39 PSF |
| 6.2. | UPLIFT (-) | -10 PSF |
| 6.3. | LATERAL | 20 PSF |

### INDEX

SHEET # | DESCRIPTION


1. COVER & DESIGN CRITERIA
2. ENGINEER'S NOTES
3. PLAN & ELEVATION VIEWS
4. BEAM TO CORNER POST CONNECTIONS
5. BEAM TO EDGE POST CONNECTIONS
6. POST BASE CONNECTIONS & FOOTINGS
7. KNEE BRACING DETAILS & REQUIREMENTS
8. PARTS & COMPONENTS
9. LEDGER BEAM CONNECTION


PREPARED BY

ENGINEERING EXPRESS®

CALL 811 BEFORE YOU DIG OR VISIT WWW.CALL811.COM

VISIT ECALC.IO/SUNDANCE
FOR ENGINEER CERTIFIED ORIGINALS & MORE INFORMATION ABOUT THIS DOCUMENT OR SCAN THIS QR CODE
VISIT ENGINEERINGEXPRESS.COM/STORE FOR ADDITIONAL PLANS, REPORTS & RESOURCES

DIGITAL SEAL NOTICE:
IF THIS DOCUMENT IS DIGITALLY SIGNED, THIS SHEET IS PART OF A DIGITALLY SIGNED FILE. IT SHALL REMAIN IN DIGITAL FORMAT. SHALL BE VERIFIED BY ELECTRONIC MEANS, & PRINTED COPIES OF THIS DOCUMENT ARE NOT CONSIDERED SIGNED AND SEALED.
PRINTED DOCUMENT NOTICE:
IF THIS DOCUMENT IS PRINTED & DOES NOTCONTAIN AN ENGINEER'S ORIGINAL SIGNATURE & SEAL, THIS DOCUMENT IS VOID & NOT VALID FOR USE. PHOTOCOPIES ARE NOT PERMITTED FOR USE.
VALID FOR 1 PERMIT ONLY U.N.O.


ENGINEERING EXPRESS®
POSTAL ADDRESS:
401 W. ATLANTIC AVE R10 BOX 219
DELRAY BEACH, FL 33444
ENGINEERINGEXPRESS.COM


SUNDANCE LOUVERED ROOFS, LLC
2462 E. 6600 S
OGDEN, UT 84405
(801) 991 - 0010

HOST ATTACHED LOUVERED PERGOLA
HIGH WIND LOADING CONDITIONS
GENERAL PERFORMANCE EVALUATION

| REMARKS | DRWN | CHKD | DATE |
|---|---|---|---|
| INIT ISSUE | CCB | FLB | 11/02/22 |
| - | - | - | - |
| - | - | - | - |
| - | - | - | - |
| - | - | - | - |


THIS DOCUMENT IS THE PROPERTY OF ENGINEERING EXPRESS, AND SHALL NOT BE REPRODUCED IN WHOLE OR PART WITHOUT WRITTEN CONSENT OF ENGINEERING EXPRESS. ALTERATIONS, ADDITIONS, OR OTHER MARKINGS TO THIS DOCUMENT ARE NOT PERMITTED AND INVALIDATE OUR CERTIFICATION.

COPYRIGHT ENGINEERING EXPRESS®


22-51204

SCALE: NTS UNLESS NOTED




NOT VALID FOR PERMIT OR CONSTRUCTION



11/8/2022 3:22 PM COLBY c:\users\colby\engineering express\production - documents\projects\22-51200 sundance - ha high wind pergola.dwg

## GENERAL

1. THIS STRUCTURE HAS BEEN DESIGNED AND SHALL BE FABRICATED IN ACCORDANCE WITH THE STRUCTURAL PROVISIONS OF THE ABOVE REFERENCED BUILDING CODE. STRUCTURE SHALL BE FABRICATED IN ACCORDANCE WITH ALL GOVERNING CODES. CONTRACTOR SHALL INVESTIGATE AND CONFORM TO ALL LOCAL BUILDING CODE AMENDMENTS WHICH MAY APPLY AND GOVERN. DESIGN CRITERIA OR SPANS BEYOND STATED HEREIN MAY REQUIRE ADDITIONAL SITE SPECIFIC SEALED ENGINEERING.
2. ANY EXISTING HOST STRUCTURE MUST BE CAPABLE OF SUPPORTING THE LOADED SYSTEM AS VERIFIED BY THE ENGINEER & OR ARCHITECT OF RECORD, et.al. THE HOST STRUCTURE WHICH IS DESIGNED, CERTIFIED, AND INSPECTED BY OTHERS MUST PROVIDE SUFFICIENT, CAPACITY FOR THIS SPECIFIED PATIO COVER SYSTEM. NO WARRANTY OR GUARANTEE TO THESE CONDITIONS, EITHER EXPRESSED OR IMPLIED, IS OFFERED WITH THIS CERTIFICATION.
3. THE CONTRACTOR SHALL CAREFULLY CONSIDER POSSIBLE IMPOSING LOADS ON ROOF, INCLUDING BUT NOT LIMITED TO ANY CONCENTRATED LOADS WHICH MAY JUSTIFY GREATER DESIGN CRITERIA. ALL STRUCTURAL MEMBERS AS SHOWN HAVE BEEN DESIGNED TO CARRY IN PLACE DESIGN LOADS ONLY; THE CONTRACTOR SHALL BE RESPONSIBLE FOR THE SUPPORT OF ANY ADDITIONAL LOADS AND FORCES IMPOSED DURING MANUFACTURING, TRUCKING, ERECTING, AND HANDLING.
4. SPECIAL INSPECTIONS MAY BE REQUESTED OR REQUIRED AT THE DISCRETION OF THE AUTHORITY HAVING JURISDICTION.
   4.1. IN AREAS OF SEISMIC DESIGN CATEGORY (SDC) D-F, AN INSPECTOR SHALL EXAMINE THE DESIGNATED SEISMIC SYSTEM, MOUNTING, AND ANCHORAGE REQUIRING QUALIFICATION IN ACCORDANCE WITH SECTION 13.2.2 OF ASCE 7 PER IBC 1705.12.4, AS WELL AS INSPECT REINFORCEMENT AND VERIFY PLACEMENT PER IBC 1908.4
5. **THIS SUBMITTAL IS FOR STRUCTURAL PURPOSES ONLY.** THIS PRODUCT SHALL BE CONSTRUCTED USING PARTS MANUFACTURED BY **"SUNDANCE LOUVERED ROOFS, LLC".** ALL NON-STRUCTURAL ELECTRICAL / MECHANICAL UNITS AND COMPONENTS SHALL BE INSTALLED AS PER THE MANUFACTURER'S RECOMMENDATIONS. ANY INFORMATION NOT REFERENCED HEREIN SHALL FOLLOW MANUFACTURER'S SPECIFICATIONS FOR THIS PRODUCT.
6. ROOF DESIGN LOADS SHOWN HEREIN INCLUDE A REDUCTION IN TOTAL WIND PRESSURE AND ROOF SNOW LOAD TO ACCOUNT FOR A POROUS ROOF SURFACE AREA EXPOSED TO WIND AND SNOW (SUCH AS A TRELLIS OR OPERABLE LOUVERED ROOF WHEN IN THE FULLY OPENED POSITION). TO UTILIZE THESE VALUES, ROOF STRUCTURE SHOULD BE CLEAR OF OBSTRUCTION, AND ANY LOUVERS SHALL REMAIN FULLY OPENED BEFORE ANY NAMED STORM OR SIMILAR HIGH-WIND OR HIGH-SNOW EVENT. IF THE ROOF IS NOT POROUS OR REMAINS CLOSED DURING THESE EVENTS, THEN THIS CERTIFICATION DOES NOT APPLY AND ADDITIONAL ENGINEERING IS REQUIRED.
7. THIS SYSTEM IS DESIGNED AS AN OPEN STRUCTURE. WALLED OR SCREENED ENCLOSURES ARE BEYOND THE SCOPE OF THIS DOCUMENT AND REQUIRE ADDITIONAL ENGINEERING REVIEW.
8. PROJECT PARTS TAKEOFF & SCHEDULE PROVIDED BY THE MANUFACTURER MAY NOT MATCH THE INFORMATION DETAILED HEREIN. MATERIAL TAKEOFF & COORDINATION SHALL NOT BE THE RESPONSIBILITY OF THE SIGNING ENGINEER. IT IS THE RESPONSIBILITY OF THE INSTALLING CONTRACTOR TO CONFIRM THE MATERIALS, HARDWARE, AND ANY REQUIRED CONNECTION ANCHORS USED FOR INSTALLATION MATCH THE INFORMATION SHOWN HEREIN BEFORE INSTALLATION BEGINS. REFER THE COVER SHEET PROJECT INFORMATION BLOCK PROVIDED FOR A QUICK REFERENCE OF PROJECT STYLE & MATERIAL REQUIREMENTS.

**LOUVERED PERGOLA DESIGN & OPERATION:**

1. LOUVERS SHALL BE SPACED SUCH THAT THEY ALLOW 50% SYSTEM POROSITY WHEN FULLY OPENED.
2. SYSTEM NOT DESIGNED TO HANDLE CONCENTRATED LOADS FROM HUMAN ACTIVITY.
3. **LOUVERS SHALL BE ROTATED TO A 90 DEGREE 'OPEN' POSITION DURING ANY NAMED STORM OR WEATHER DESIGN EVENT TO PREVENT EXCESSIVE FORCE TO THIS STRUCTURE. THE OWNER SHALL BE NOTIFIED IN WRITING OF THIS AND THAT CARE SHALL BE TAKEN TO AVOID BUILDUP OF SNOW, DEBRIS, CONSTRUCTION LOADS, & ANY OTHER FORCES THAT CAN AFFECT THE INTEGRITY OF THIS DESIGN.**
4. THE STRUCTURE SHALL BE POSTED WITH A LEGIBLE AND READILY VISIBLE DECAL OR PAINTED INSTRUCTIONS TO THE OWNER OR TENANT STATING TO REPOSITION THE LOUVERS AND WINDSCREENS DURING WIND OR SNOW ADVISORIES. THE CANOPY OWNER SHALL BE NOTIFIED OF THESE CONDITIONS BY THE PERMIT HOLDER AT THE TIME OF SALE.
5. SYSTEM SHALL BE EQUIPPED AND SOMFY CERTIFIED TO OPERATE PROPERLY WITH SENSORS WHICH WILL PROMPT THE LOUVER BLADES TO ROTATE TO THE OPEN (VERTICAL) POSITION WHENEVER THE WIND SPEED REACHES 45 MPH MINIMUM, OR TEMPERATURE DROPS TO 32° FAHRENHEIT OR LOWER, AND/OR INCLUDE THE ABILITY FOR MANUAL OPENING AND LOCKING BY THE USER.
6. LOUVERED ROOF SYSTEM SHALL BE PER MANUFACTURER MAXIMUM SPANS OR BY OTHERS.
7. NO CERTIFICATION IS OFFERED FOR WATERPROOFING, SIZING, OR OPERATION OF GUTTERS.
8. SYSTEM NOT DESIGNED FOR WATERSHED OF RAINFALL FROM ADJACENT ROOFS UNLESS SPECIFICALLY SHOWN HEREIN, TYP.

## STRUCTURAL MATERIALS AND CONNECTIONS

**STRUCTURAL ALUMINUM & ALUMINUM WELDING:**

1. ALL COMPONENTS SHALL BE STRUCTURAL ALUMINUM (U.N.O.) AND SHALL BE FABRICATED AND ERECTED ACCORDING TO THE GOVERNING BUILDING CODE AND MATERIAL STANDARDS REFERENCED ON THIS SHEET.
2. UNLESS OTHERWISE NOTED, ALL STRUCTURAL ALUMINUM SHALL BE MIN 1/8" THICK AND BE OF THE FOLLOWING ALLOY AND TEMPER:
   2.1. BEAMS, PURLINS, COLUMNS ..... 6063-T6
   2.2. ALL OTHER EXTRUSIONS ..... 6063-T6
   2.3. FASTENERS ..... SS 304
3. STRUCTURAL ALUMINUM SHALL BE FRAMED PLUMB AND TRUE AND ADEQUATELY BRACED DURING CONSTRUCTION.
4. ALL BEAMS SHALL HAVE A MINIMUM 1 1/2" DEPTH FULL BEARING SUPPORT UNLESS NOTED OTHERWISE.
5. WHERE ALUMINUM IS IN CONTACT WITH OTHER METALS EXCEPT 300 SERIES STAINLESS STEEL, ZINC OR CADMIUM AND THE FAYING SURFACES ARE EXPOSED TO MOISTURE, THE OTHER METALS SHALL BE PAINTED OR COATED WITH ZINC, CADMIUM, OR ALUMINUM.
6. UNCOATED ALUMINUM SHALL NOT BE EXPOSED TO MOISTURE OR RUNOFF THAT HAS COME IN CONTACT WITH OTHER UNCOATED METALS EXCEPT 300 SERIES STAINLESS STEEL, ZINC, OR CADMIUM. ALUMINUM SURFACES TO BE PLACED IN CONTACT WITH MASONRY, CONCRETE, WOOD, FIBERBOARD, OR OTHER POROUS MATERIAL THAT ABSORBS WATER SHALL BE PAINTED.
7. FOR ALUMINUM IN CONTACT WITH CONCRETE: ACCEPTABLE PAINTS: PRIMING PAINT (ONE COAT), SUCH AS ZINC MOLYBDATE PRIMER IN ACCORDANCE WITH FEDERAL SPECIFICATION TT-P-645B ("GOOD QUALITY", NO LEAD CONTENT). ALT: HEAVY COATING OF ALKALI RESISTANT BITUMINOUS PAINT. ALT: WRAP ALUMINUM WITH A SUITABLE PLASTIC TAPE APPLIED IN SUCH A MANNER AS TO PROVIDE ADEQUATE PROTECTION AT THE OVERLAPS.
8. ALUMINUM SHALL NOT BE EMBEDDED IN CONCRETE TO WHICH CORROSIVE COMPONENTS SUCH AS CHLORIDES HAVE BEEN ADDED IF THE ALUMINUM WILL BE ELECTRICALLY CONNECTED TO STEEL. EMBEDDED ALUMINUM ELEMENTS WILL BE COVERED WITH PLASTIC TAPE OR OTHERWISE PROTECTED AS PER 2015 ADM M.7.3.
9. BOLT HOLES SHALL BE DRILLED THE SAME NOMINAL DIAMETER AS THE BOLT + 1/16".
10. ALUMINUM WELDING SHALL BE PERFORMED IN ACCORDANCE WITH WELD FILLER ALLOYS MEETING ANSI/AWS A5.10 STANDARDS TO ACHIEVE ULTIMATE DESIGN STRENGTH IN ACCORDANCE WITH THE ALUMINUM DESIGN MANUAL PART I-A, TABLE 7.3.1. ALL ALUMINUM CONSTRUCTION SHALL BE IN CONFORMANCE WITH THE TOLERANCES, QUALITY, AND METHODS OF CONSTRUCTION AS SET FORTH IN THE AMERICAN WELDING SOCIETY'S STRUCTURAL WELDING CODE-ALUMINUM (D1.2). MINIMUM WELD IS 1/8" THROAT FULL PERIMETER FILLET WELD UNLESS OTHERWISE NOTED.
11. STAINLESS STEEL FASTENERS SHALL BE ASTM F593 316 SS COLD WORKED CONDITION. PROVIDE (5) PITCHES MINIMUM PAST THE THREAD PLANE FOR ALL SCREW CONNECTIONS. ALL FASTENER CONNECTIONS TO METAL SHALL PROVIDE 2xDIAMETER EDGE DISTANCE AND 3xDIAMETER SPACING.
12. SELF-DRILLING SCREWS SHALL BE TEK BRAND / ALL POINTS FASTENERS OF SIZE #14, STAINLESS STEEL 300 SERIES, WITH MINIMUM 1/2" THREAD ENGAGEMENT BEYOND THE CONNECTED PART, UNLESS OTHERWISE NOTED.
13. THE CONTRACTOR IS RESPONSIBLE TO INSULATE ALL MEMBERS FROM DISSIMILAR MATERIALS TO PREVENT ELECTROLYSIS.
14. ELECTRICAL GROUND, WHEN REQUIRED, TO BE DESIGNED & INSTALLED BY OTHERS.

**STRUCTURAL WOOD (AS APPLICABLE):**

1. ALL DIMENSION LUMBER SHALL BE STRUCTURAL GRADE #2 SOUTHERN YELLOW PINE OR BETTER MEETING APPLICABLE REQUIREMENTS OF THE SOUTHERN PINE INSPECTION BUREAU (SPIB) AND PRESSURE-IMPREGNATED (PT) BY AN APPROVED PROCESS (ACQ 0.4 PRESSURE TREATED) PRESERVATIVE IN ACCORDANCE WITH THE APPLICABLE PROVISIONS OF THE BUILDING CODE AND AMERICAN WOOD PRESERVERS ASSN (AWPA) "BOOK OF STANDARDS" OR 0.55 SPECIFIC GRAVITY MIN.
2. ALL METAL CONNECTORS IN CONTACT WITH WOOD USED IN LOCATIONS EXPOSED TO WEATHER SHALL BE GALVANIZED.
3. NAILS SHALL PENETRATE THE SECOND MEMBER A DISTANCE EQUAL TO THE THICKNESS OF THE MEMBER BEING NAILED THERETO. THERE SHALL BE NOT LESS THAN 2 NAILS IN ANY CONNECTION.
4. MEMBERS SHALL BE FREE OF CRACKS AND KNOTS. MOISTURE CONTENT SHALL BE 19% OR LESS.
5. WOOD THAT IS IN CONTACT WITH CONCRETE OR MASONRY, AND AT OTHER LOCATIONS AS SHOWN ON STRUCTURAL DRAWINGS, SHALL BE PROTECTED WITH 30 # FELT (UNLESS NOTED OTHERWISE) OR PRESSURE TREATED IN ACCORDANCE WITH AITC-109. MEMBER SIZE SHOWN ARE NOMINAL UNLESS NOTED OTHERWISE.

**OTHER MATERIALS (AS APPLICABLE)**

1. ANY SPECIFIED LIGHT GAUGE STEEL MEMBERS SHALL CONFORM TO ASTM A36 AND CURRENT EDITION OF AISC WITH MINIMUM Fy = 36KSI
2. MATERIALS NOT DETAILED HEREIN SHALL BE DESIGNED AND INSTALLED CONFORMING TO THE MANUFACTURER'S SPECIFICATIONS AND ANY GOVERNING CODES & STANDARDS.

**ANCHORS & FASTENERS**

1. ALL FASTENERS TO BE #14 OR GREATER ASTM F593 COLD WORKED 304 STAINLESS STEEL, UNLESS NOTED OTHERWISE. FASTENERS SHALL BE CADMIUM-PLATED OR OTHERWISE CORROSION-RESISTANT MATERIAL AND SHALL COMPLY WITH "SPECIFICATIONS FOR ALUMINUM STRUCTURES" BY THE ALUMINUM ASSOCIATION, INC., & ANY APPLICABLE FEDERAL, STATE, AND/OR LOCAL CODES.
2. ALL METAL CONNECTORS USED IN LOCATIONS EXPOSED TO WEATHER SHALL BE HOT-DIP GALVANIZED.
3. ALL FASTENERS SHALL BE SPACED WITH 2x DIAMETER END DISTANCE AND 2.5xDIAMETER MIN. SPACING TO ADJACENT FASTENERS, UNLESS NOTED OTHERWISE. PROVIDE (5) PITCHES MINIMUM PAST THE THREAD PLANE FOR ALL FASTENERS.
4. ANCHORS SHALL BE INSTALLED IN ACCORDANCE WITH MANUFACTURERS' RECOMMENDATIONS. MINIMUM EMBEDMENT SHALL BE AS NOTED HEREIN. MINIMUM EMBEDMENT AND EDGE DISTANCE ARE DEPTHS INTO SOLID SUBSTRATE AND DO NOT INCLUDE THICKNESS OF STUCCO, FOAM, BRICK, AND OTHER WALL FINISHES. ALL CONCRETE ANCHORS SHALL BE INSTALLED TO NON-CRACKED CONCRETE ONLY.
5. ANCHOR QUANTITIES INDICATED IN DETAILS ARE FOR GRAPHICAL PURPOSES ONLY. DO NOT SCALE DIAMETER, LENGTH, OR PENETRATION(S). HEAD STYLE(S) ARE FREELY INTERCHANGEABLE.

**NON-STRUCTURAL ELEMENTS:**

1. THE INSTALLATION OF ANY ACCESSORIES THAT DO NOT AFFECT THE STRUCTURAL INTEGRITY OF THE STRUCTURE ARE OUTSIDE THE SCOPE OF THIS CERTIFICATION AND NOT REQUIRED TO BE CERTIFIED UNDER THIS STRUCTURAL DRAWING. THEY MAY BE INSTALLED WITHIN LIMITATIONS STATED HEREIN AND AS DESIRED PER MFR. SPECIFICATIONS. DETAILS PROVIDED HEREIN ARE FOR REFERENCE ONLY

## FOUNDATION, CONCRETE, AND REINFORCEMENT

**FOUNDATION & EARTHWORK**

1. SURROUNDING SOIL TO BE WELL COMPACTED BY MECHANICAL MEANS TO 90% OPTIMUM DENSITY, BE FREE OF MUCK AND ORGANICS, AND ACHIEVE 2000 PSF MIN BEARING PRESSURE AND LATERAL BEARING PRESSURE BELOW NATURAL GRADE OF 150 PSF.
2. EXCAVATIONS NEAR ADJACENT FOOTINGS AND FOUNDATIONS SHALL NOT REMOVE LATERAL SUPPORT WITHOUT FIRST UNDERPINNING OR PROTECTING THE THE FOOTING OR FOUNDATION AGAINST SETTLEMENT OR LATERAL TRANSLATION.
3. SOIL SHALL BE CLASSIFIED OR VERIFIED BY OTHERS PRIOR TO CONSTRUCTION AS SAND CLASS OR BETTER. SHOULD OTHER CONDITIONS OR MATERIALS BE ENCOUNTERED THE ENGINEER OF RECORD MUST BE NOTIFIED.
4. FILL TO BE PLACED OVER THE NATURAL GROUND TO ACHIEVE THE FINISH PAD ELEVATION. BACKFILL MATERIAL SHALL CONSIST OF CLEAN GRANULAR SOILS CONTAINING LESS THAN 5% ORGANIC WITH NO MORE THAN 30% ROCK, AND NO ROCK LARGER THAN 3 INCHES IN DIAMETER AND PLACED IN LOOSE LIFTS NOT TO EXCEED 12 INCHES IN THICKNESS. ALL FILL MATERIAL FOUND AT FOUNDATION LEVEL AND BACKFILL SHALL BE COMPACTED TO 98% OF THE STANDARD PROCTOR DENSITY.

**CONCRETE**

1. CONCRETE MIXTURES SHALL BE DESIGNED TO REACH A COMPRESSIVE STRENGTH OF 3,000 PSI IN 28 DAYS.
2. ALL MIXING, TRANSPORTING, PLACING, & CURING OF CONCRETE SHALL BE IN ACCORDANCE WITH ACI 318.
3. NO ADMIXTURES ARE TO BE USED WITHOUT THE WRITTEN APPROVAL OF THE ABOVE-SIGNED ENGINEER.
4. CONCRETE SHALL BE TYPE 1 PORTLAND CEMENT MEETING THE REQUIREMENTS OF ASTM C150, AGGREGATES TO MEET ASTM C33. POTABLE WATER SHALL BE USED.
5. SLUMP SHALL BE A MINIMUM OF 3" AND MAXIMUM OF 5" CONCRETE DURING AND IMMEDIATELY AFTER DEPOSITING SHALL BY THOROUGHLY COMPACTED BY MEANS OF MECHANICAL VIBRATION.

**REINFORCING STEEL**

1. ALL REINFORCEMENT SHALL BE DEFORMED BARS OF INTERMEDIATE GRADE NEW BILLET STEEL CONFORMING TO CURRENT REQUIREMENTS OF ASTM A615, GRADE 60 (U.O.N.), FREE FROM OIL, LOOSE SCALE AND LOOSE RUST AND BENT, LAPPED, PLACED, SUPPORTED AND FASTENED ACCORDING TO THE "ACI DETAILING MANUAL" (SP-66) AND THE ACI 318.
2. ALL WELDING WIRE FABRIC IS TO CONFORM TO ASTM A185 MINIMUM YIELD STRENGTH OF 85 KSI.
3. CLEAR COVER FOR REINFORCEMENT SHALL BE AS FOLLOWS UNLESS OTHERWISE NOTED:
   FOOTINGS EXPOSED TO EARTH: 3"
   UNFORMED FACES EXPOSED TO EARTH: 3"
   SLABS EXPOSED TO WEATHER: 2"
4. ALL STEEL SHALL BE SECURELY HELD IN PLACE DURING POURING OF CONCRETE. IF REQUIRED, ADDITIONAL BARS SHALL BE PROVIDED BY THE GENERAL CONTRACTOR TO FURNISH SUPPORT FOR ALL BARS.
5. STRUCTURAL CONCRETE SLABS SHALL BE 6" THICK MINIMUM & INCLUDE MINIMUM REINFORCEMENT OF EITHER W4XW4 / 4X4 WELDED WIRE MESH, OR#3 BARS @ 12" EACH WAY. STRUCTURAL SLABS SHALL ONLY BE UTILIZED AS A STRUCTURAL FOUNDATION FOR PATIO COVERS WITH SUFFICIENT HOST STRUCTURE SUPPORT AS DETAILED HEREIN.

## CERTIFICATION & LIABILITY

1. USE OF THIS SIGNED & SEALED DOCUMENT CONSTITUTES ACCEPTANCE OF THE PROPOSED SYSTEM LAYOUT, COMPONENTS SELECTED, AND INSTALLATION.
2. THESE DRAWINGS ARE NOT INTENDED TO BE USED AS FABRICATION OR SHOP DRAWINGS. SHOP DRAWINGS SHALL BE CREATED AND APPROVED BY OTHERS, AND BE SUBMITTED FOR E.O.R. REVIEW AND APPROVAL BEFORE INSTALLATION.
3. DIMENSIONS ARE SHOWN TO ILLUSTRATE DESIGN FORCES AND OTHER DESIGN CRITERIA. THEY MAY VARY SLIGHTLY, BUT SHALL REMAIN IN CONFORMANCE WITH THE LIMITATIONS OF THIS PLAN. THE CONTRACTOR IS TO VERIFY ALL FIELD DIMENSIONS PRIOR TO INSTALLATION, AND VERIFY THAT PROPOSED DIMENSIONS AND FIELD CONDITIONS AGREE WITH THIS PROPOSED PLAN.
4. ENGINEERING EXPRESS HAS NOT VISITED THIS JOBSITE. INFORMATION CONTAINED HEREIN IS BASED ON CONTRACTOR SUPPLIED DATA AND MEASUREMENTS. ENGINEERING EXPRESS SHALL NOT BE HELD RESPONSIBLE OR LIABLE IN ANY WAY FOR ERRONEOUS OR INACCURATE DATA OR MEASUREMENTS. WORK SHALL BE FIELD VERIFIED PRIOR TO CONSTRUCTION. THIS ENGINEERING SHALL BE NOTIFIED AND GIVEN AN OPPORTUNITY TO REEVALUATE OUR WORK UPON DISCOVERY OF ANY INACCURATE INFORMATION PRIOR TO MODIFICATION OF EXISTING FIELD CONDITIONS AND FABRICATION AND INSTALLATION OF MATERIALS.
5. THIS DOCUMENT SHALL NOT BE USED OR REPRODUCED WITHOUT THE ORIGINAL SIGNATURE & RAISED SEAL OF THE CERTIFYING P.E. ALTERATIONS, ADDITIONS OR OTHER MARKINGS TO THIS DOCUMENT ARE NOT PERMITTED AND INVALIDATE OUR CERTIFICATION. PHOTOCOPIES AND UNSEALED DOCUMENTS ARE NOT TO BE ACCEPTED.
6. ENGINEER SEAL AFFIXED HERETO VALIDATES STRUCTURAL DESIGN AS SHOWN ONLY. USE OF THIS SPECIFICATION BY CONTRACTOR, et. al. INDEMNIFIES & SAVES HARMLESS THIS ENGINEER FOR ALL COST & DAMAGES INCLUDING LEGAL FEES & APPELLATE FEES RESULTING FROM MATERIAL FABRICATION, SYSTEM ERECTION, & CONSTRUCTION PRACTICES BEYOND THAT WHICH IS CALLED FOR BY LOCAL, STATE, & FEDERAL CODES & FROM DEVIATIONS OF THIS PLAN.
7. ALTERATIONS, ADDITIONS, HIGHLIGHTING, OR OTHER MARKINGS TO THIS DOCUMENT ARE ONLY PERMITTED TO SHOW SITE-SPECIFIC CONDITIONS, HOWEVER ANY CHANGES, ALTERATIONS OR ADDITIONS MADE TO THE CONTENT OF THIS DOCUMENT WILL INVALIDATE THIS CERTIFICATION.
8. EXCEPT AS EXPRESSLY PROVIDED HEREIN, NO ADDITIONAL CERTIFICATIONS OR AFFIRMATIONS ARE INTENDED

ABBREVIATIONS:

θ = SLOPE, DEGREES
(+) = POSITIVE (DOWN-IN) PRESSURE
(-) = NEGATIVE (UP-OUT) PRESSURE
Hc = CANOPY HEIGHT
He = EAVE HEIGHT
PSF = POUNDS PER SQUARE FOOT
MPH = MILES PER HOUR
TYP = TYPICAL

CALL 811 BEFORE YOU DIG OR VISIT WWW.CALL811.COM

SPACE RESERVED FOR DIGITAL SEAL INFORMATION

WHEN DIGITALLY SEALED, THIS NOTE SHALL BE FULLY COVERED ON SHEET 1

WHEN PRINTED OR PHYSICALLY SEALED, SEAL OF CERTIFYING ENGINEER, AND DATE OF CERTIFICATION SHALL BE SHOWN TO THE RIGHT.

IN ALL CASES, CERTIFYING ENGINEER AND CERT OF AUTH AS LISTED ON STAMP

PE SEAL REQUIRED

COPIES NOT VALID FOR PERMIT

DIGITAL SEAL NOTICE:
IF THIS DOCUMENT IS DIGITALLY SIGNED, THIS SHEET IS PART OF A DIGITALLY SIGNED FILE. IT SHALL REMAIN IN DIGITAL FORMAT, SHALL BE VERIFIED BY ELECTRONIC MEANS, & PRINTED COPIES OF THIS DOCUMENT ARE NOT CONSIDERED SIGNED AND SEALED.
PRINTED DOCUMENT NOTICE:
IF THIS DOCUMENT IS PRINTED & DOES NOT CONTAIN AN ENGINEER'S ORIGINAL SIGNATURE & SEAL, THIS DOCUMENT IS VOID & NOT VALID FOR USE. PHOTOCOPIES ARE NOT PERMITTED FOR USE.
VALID FOR 1 PERMIT ONLY U.N.O.

ENGINEERING EXPRESS®
POSTAL ADDRESS:
401 W. ATLANTIC AVE R10 BOX 219
DELRAY BEACH, FL 33444
ENGINEERINGEXPRESS.COM

SUNDANCE LOUVERED ROOFS, LLC
2462 E. 6600 S
OGDEN, UT 84405
(801) 991 - 0010

HOST ATTACHED LOUVERED PERGOLA
HIGH WIND LOADING CONDITIONS
GENERAL PERFORMANCE EVALUATION

| REMARKS | DRWN | CHKD | DATE |
|---|---|---|---|
| INIT ISSUE | CCB | FLB | 11/02/22 |
| | - | - | - |
| | - | - | - |
| | - | - | - |
| | - | - | - |

THIS DOCUMENT IS THE PROPERTY OF ENGINEERING EXPRESS, AND SHALL NOT BE REPRODUCED IN WHOLE OR PART WITHOUT WRITTEN CONSENT OF ENGINEERING EXPRESS. ALTERATIONS, ADDITIONS, OR OTHER MARKINGS TO THIS DOCUMENT ARE NOT PERMITTED AND INVALIDATE OUR CERTIFICATION.

COPYRIGHT ENGINEERING EXPRESS®

22-51204

SCALE: NTS UNLESS NOTED



NOT VALID FOR PERMIT OR CONSTRUCTION

11/8/2022 3:22 PM COLBY c:\users\colby\engineering express\production - documents\projects\22-51200 sundance louvered roof\work\drawings & cad\22-51204 sundance - ha high wind pergola.dwg

# PROJECT VIEWS - FREESTANDING PLANS & ELEVATIONS

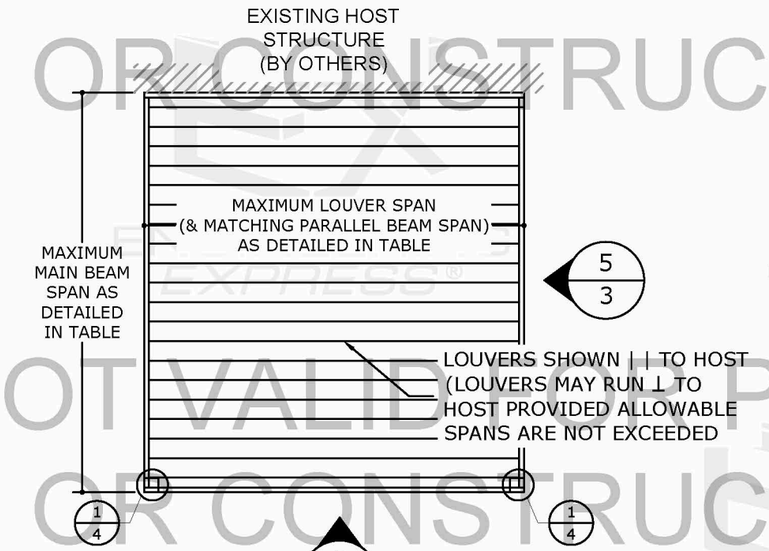


1/3 HOST ATTACHED PERGOLA SINGLE LOUVER BAY
NOT TO SCALE — PLAN

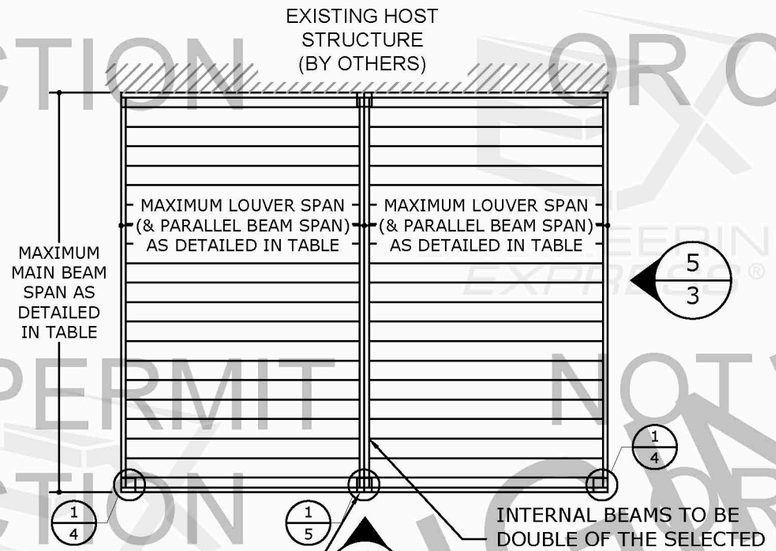


2/3 HOST ATTACHED PERGOLA MULTIPLE LOUVER BAY
NOT TO SCALE — PLAN

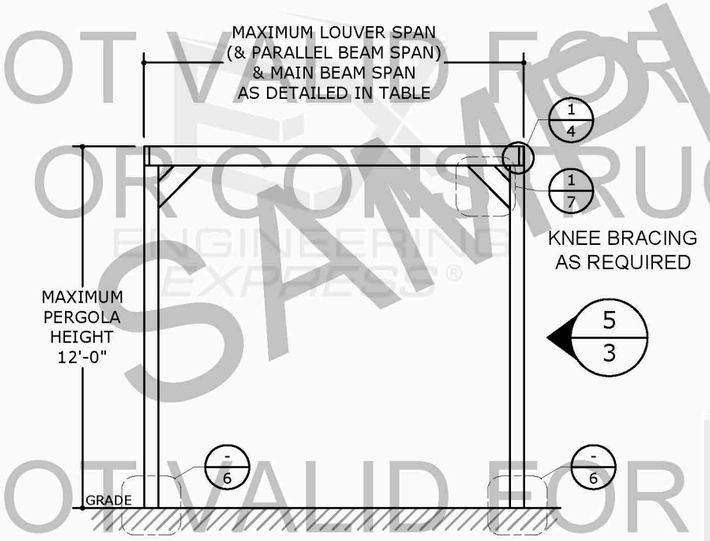


3/3 HOST ATTACHED PERGOLA SINGLE LOUVER BAY
NOT TO SCALE — ELEV

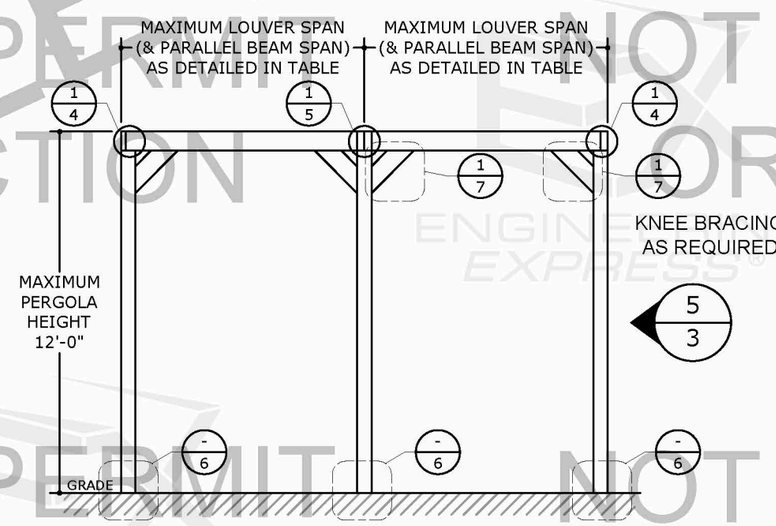


4/3 HOST ATTACHED PERGOLA MULTIPLE LOUVER BAY
NOT TO SCALE — ELEV

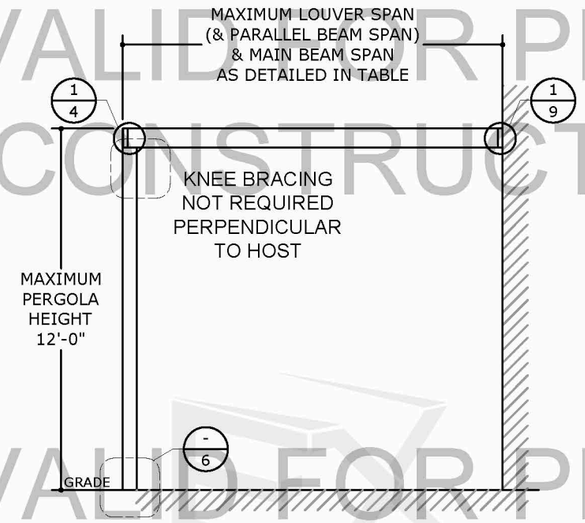


5/3 HOST ATTACHED PERGOLA SINGLE LOUVER BAY
NOT TO SCALE — ELEV

| ALLOWABLE BEAM SPANS | | |
|---|---|---|
| LOUVER BLADE | | 14 FT |
| MAIN BEAMS | 2" X 8" X 1/8" | 14 FT |
| | DOUBLE 2" X 8" X 1/8" | 22 FT |
| | 3" X 10" X 5/32" | 22 FT |
| | 4" X 8" X 3/16" | 22 FT |

BEAM & LOUVER SPANS LISTED ABOVE ARE APPLICABLE ONLY FOR HIGH WIND DESIGN CONDITIONS HEREIN:
HOST ATTACHED SYSTEM
170 MPH ULT WIND SPEED; MAX EXPOSURE C
10 PSF GROUND SNOW LOAD

MAXIMUM PERGOLA BEAM SPANS (BETWEEN ANY TWO POSTS) TO BE WITHIN LIMITS OF TABLE ABOVE FOR STRUCTURAL MEMBERS SELECTED.

ALL STRUCTURAL BEAM INTERSECTIONS TO BE SUPPORTED BY POSTS AS SHOWN IN PLAN VIEW DETAILS

SPACE RESERVED FOR DIGITAL SEAL INFORMATION
WHEN DIGITALLY SEALED, THIS NOTE SHALL BE FULLY COVERED ON SHEET 1
WHEN PRINTED OR PHYSICALLY SEALED, SEAL OF CERTIFYING ENGINEER, AND DATE OF CERTIFICATION SHALL BE SHOWN TO THE RIGHT.
IN ALL CASES, CERTIFYING ENGINEER AND CERT OF AUTH AS LISTED ON STAMP

PE SEAL REQUIRED

COPIES NOT VALID FOR PERMIT

DIGITAL SEAL NOTICE:
IF THIS DOCUMENT IS DIGITALLY SIGNED, THIS SHEET IS PART OF A DIGITALLY SIGNED FILE. IT SHALL REMAIN IN DIGITAL FORMAT, SHALL BE VERIFIED BY ELECTRONIC MEANS, & PRINTED COPIES OF THIS DOCUMENT ARE NOT CONSIDERED SIGNED AND SEALED.
PRINTED DOCUMENT NOTICE:
IF THIS DOCUMENT IS PRINTED & DOES NOTCONTAIN AN ENGINEER'S ORIGINAL SIGNATURE & SEAL, THIS DOCUMENT IS VOID & NOT VALID FOR USE. PHOTOCOPIES ARE NOT PERMITTED FOR USE.
VALID FOR 1 PERMIT ONLY U.N.O.


ENGINEERING EXPRESS®
POSTAL ADDRESS:
401 W. ATLANTIC AVE R10 BOX 219
DELRAY BEACH, FL 33444
ENGINEERINGEXPRESS.COM


SUNDANCE LOUVERED ROOFS, LLC
2462 E. 6600 S
OGDEN, UT 84405
(801) 991 - 0010

HOST ATTACHED LOUVERED PERGOLA
HIGH WIND LOADING CONDITIONS
GENERAL PERFORMANCE EVALUATION

| REMARKS | DRWN | CHKD | DATE |
|---|---|---|---|
| INIT ISSUE | CCB | FLB | 11/02/22 |


THIS DOCUMENT IS THE PROPERTY OF ENGINEERING EXPRESS, AND SHALL NOT BE REPRODUCED IN WHOLE OR PART WITHOUT WRITTEN CONSENT OF ENGINEERING EXPRESS. ALTERATIONS, ADDITIONS, OR OTHER MARKINGS TO THIS DOCUMENT ARE NOT PERMITTED AND INVALIDATE OUR CERTIFICATION.
COPYRIGHT ENGINEERING EXPRESS®


22-51204

SCALE: NTS UNLESS NOTED

3 OF 9


NOT VALID FOR PERMIT OR CONSTRUCTION
SAMPLE



c:\users\colby\engineering express\production - documents\projects\22-51200 sundance louvered roof\work\drawings & cad\22-51204 sundance - ha high wind pergola.dwg
11/8/2022 3:22 PM COLBY

# BEAM TO CORNER POST CONNECTIONS

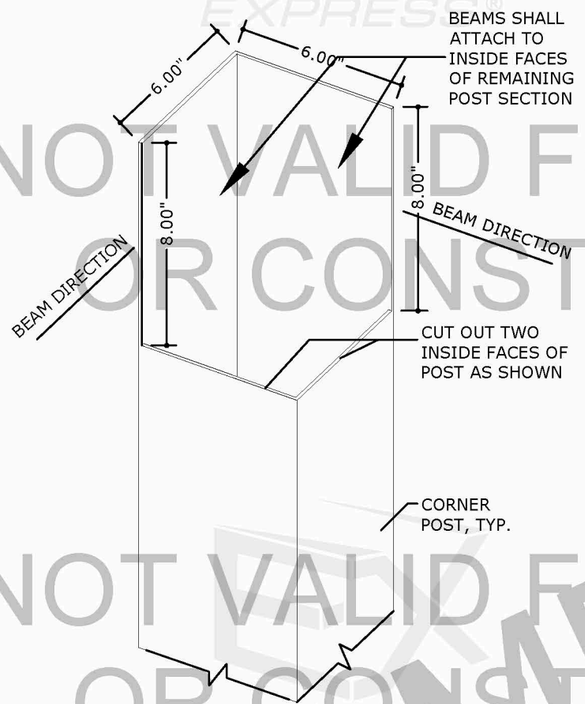


1/4 CORNER POST CUT OUT
NOT TO SCALE ISO

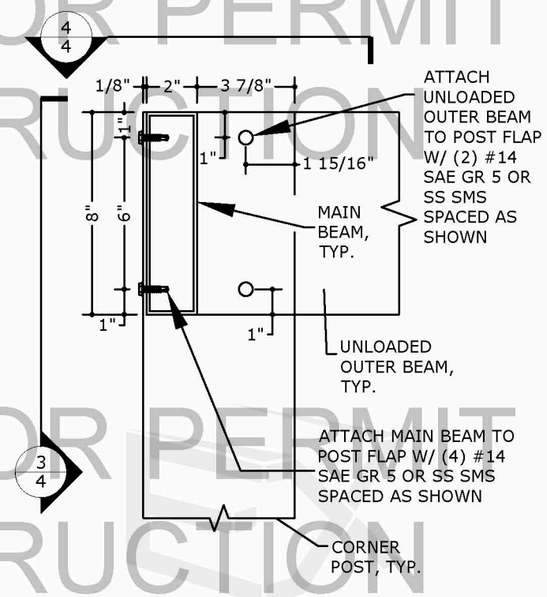


2/4 SINGLE BEAM TO CORNER POST
NOT TO SCALE SECTION

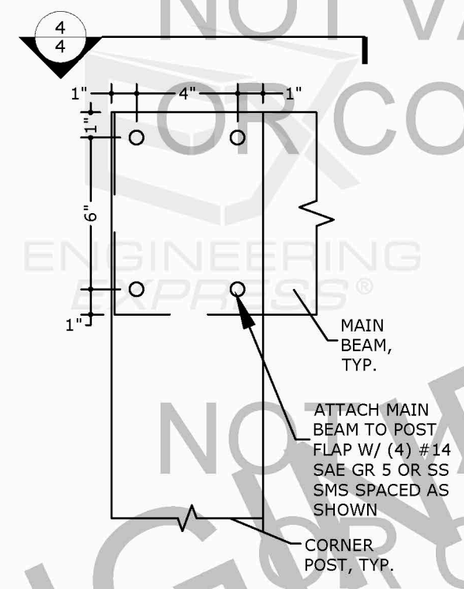


3/4 SINGLE BEAM TO CORNER POST
NOT TO SCALE BACK DETAIL

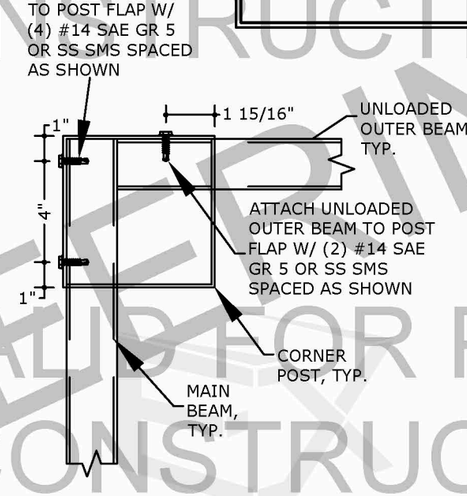


4/4 SINGLE BEAM TO CORNER POST
NOT TO SCALE PLAN DETAIL

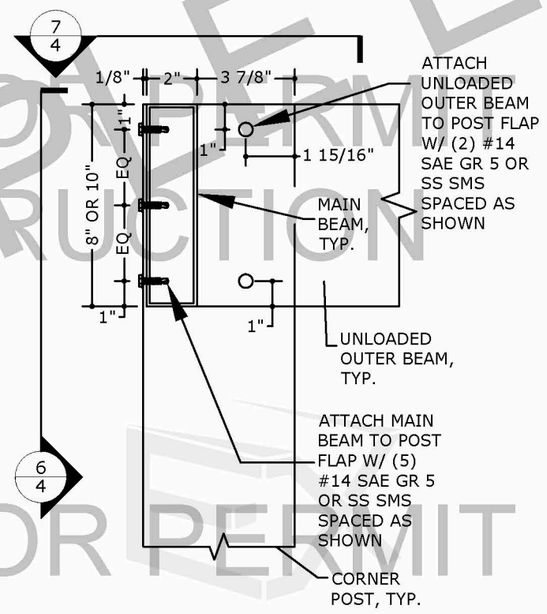


5/4 DOUBLE BEAM TO CORNER POST
NOT TO SCALE SECTION

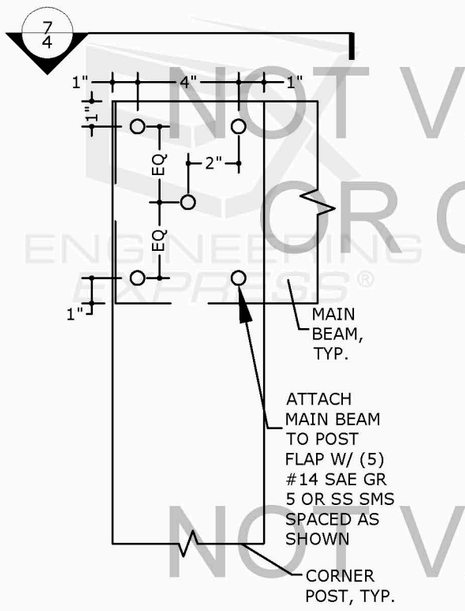


6/4 DOUBLE BEAM TO CORNER POST
NOT TO SCALE BACK DETAIL

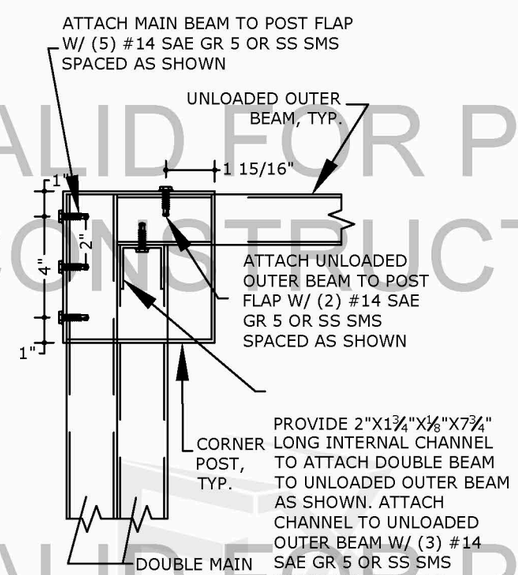


7/4 DOUBLE BEAM TO CORNER POST
NOT TO SCALE PLAN DETAIL

SPACE RESERVED FOR DIGITAL SEAL INFORMATION

WHEN DIGITALLY SEALED, THIS NOTE SHALL BE FULLY COVERED ON SHEET 1

WHEN PRINTED OR PHYSICALLY SEALED, SEAL OF CERTIFYING ENGINEER, AND DATE OF CERTIFICATION SHALL BE SHOWN TO THE RIGHT.

IN ALL CASES, CERTIFYING ENGINEER AND CERT OF AUTH AS LISTED ON STAMP

PE SEAL REQUIRED

COPIES NOT VALID FOR PERMIT

DIGITAL SEAL NOTICE:
IF THIS DOCUMENT IS DIGITALLY SIGNED, THIS SHEET IS PART OF A DIGITALLY SIGNED FILE. IT SHALL REMAIN IN DIGITAL FORMAT, SHALL BE VERIFIED BY ELECTRONIC MEANS, & PRINTED COPIES OF THIS DOCUMENT ARE NOT CONSIDERED SIGNED AND SEALED.
PRINTED DOCUMENT NOTICE:
IF THIS DOCUMENT IS PRINTED & DOES NOTCONTAIN AN ENGINEER'S ORIGINAL SIGNATURE & SEAL, THIS DOCUMENT IS VOID & NOT VALID FOR USE. PHOTOCOPIES ARE NOT PERMITTED FOR USE.
VALID FOR 1 PERMIT ONLY U.N.O.

ENGINEERING EXPRESS®
POSTAL ADDRESS:
401 W. ATLANTIC AVE R10 BOX 219
DELRAY BEACH, FL 33444
ENGINEERINGEXPRESS.COM

SUNDANCE LOUVERED ROOFS, LLC
2462 E. 6600 S
OGDEN, UT 84405
(801) 991 - 0010

HOST ATTACHED LOUVERED PERGOLA
HIGH WIND LOADING CONDITIONS
GENERAL PERFORMANCE EVALUATION

| REMARKS | DRWN | CHKD | DATE |
|---|---|---|---|
| INIT ISSUE | CCB | FLB | 11/02/22 |
| | - | - | - |
| | - | - | - |
| | - | - | - |
| | - | - | - |
| | - | - | - |

THIS DOCUMENT IS THE PROPERTY OF ENGINEERING EXPRESS, AND SHALL NOT BE REPRODUCED IN WHOLE OR PART WITHOUT WRITTEN CONSENT OF ENGINEERING EXPRESS. ALTERATIONS, ADDITIONS, OR OTHER MARKINGS TO THIS DOCUMENT ARE NOT PERMITTED AND INVALIDATE OUR CERTIFICATION.
COPYRIGHT ENGINEERING EXPRESS®

22-51204

SCALE: NTS UNLESS NOTED



NOT VALID FOR PERMIT OR CONSTRUCTION
ENGINEERING EXPRESS®
SAMPLE

11/8/2022 3:22 PM COLBY c:\users\colby\engineering express\production - documents\projects\22-51200 sundance louvered roof\work\drawings & cad\22-51204 sundance - ha high wind pergola.dwg

# BEAM TO EDGE POST CONNECTIONS (& CONNECTIONS AT OVERHANG POSTS)

NOT VALID FOR PERMIT OR CONSTRUCTION

SPACE RESERVED FOR DIGITAL SEAL INFORMATION

WHEN DIGITALLY SEALED, THIS NOTE SHALL BE FULLY COVERED ON SHEET 1

WHEN PRINTED OR PHYSICALLY SEALED, SEAL OF CERTIFYING ENGINEER, AND DATE OF CERTIFICATION SHALL BE SHOWN TO THE RIGHT.

IN ALL CASES, CERTIFYING ENGINEER AND CERT OF AUTH AS LISTED ON STAMP

PE SEAL REQUIRED

COPIES NOT VALID FOR PERMIT

DIGITAL SEAL NOTICE:
IF THIS DOCUMENT IS DIGITALLY SIGNED, THIS SHEET IS PART OF A DIGITALLY SIGNED FILE. IT SHALL REMAIN IN DIGITAL FORMAT, SHALL BE VERIFIED BY ELECTRONIC MEANS, & PRINTED COPIES OF THIS DOCUMENT ARE NOT CONSIDERED SIGNED AND SEALED.
PRINTED DOCUMENT NOTICE:
IF THIS DOCUMENT IS PRINTED & DOES NOTCONTAIN AN ENGINEER'S ORIGINAL SIGNATURE & SEAL, THIS DOCUMENT IS VOID & NOT VALID FOR USE. PHOTOCOPIES ARE NOT PERMITTED FOR USE.
VALID FOR 1 PERMIT ONLY U.N.O.

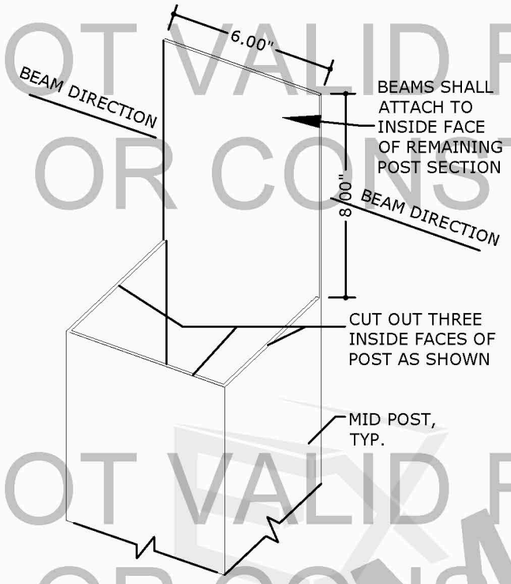


1/5 EDGE POST CUT OUT — NOT TO SCALE — ISO

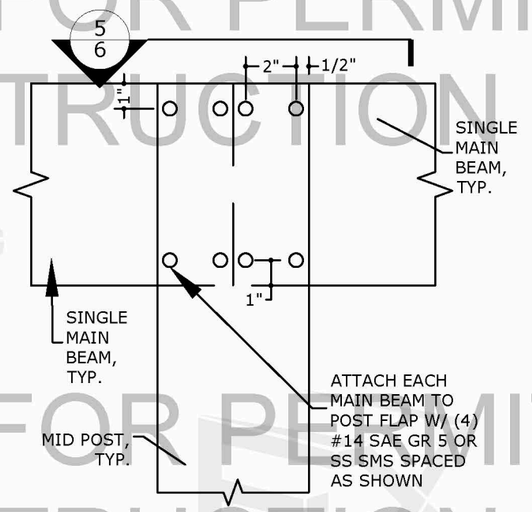


2/5 SINGLE BEAM TO EDGE POST — NOT TO SCALE — SECTION

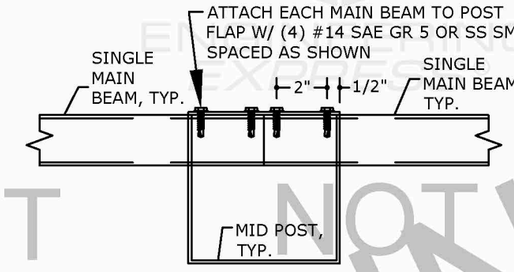


3/5 SINGLE BEAM TO EDGE POST — NOT TO SCALE — BACK DETAIL

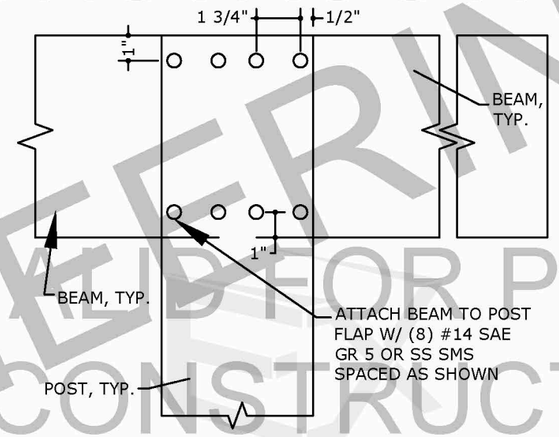


4/5 SINGLE OR DOUBLE BEAM TO EDGE POST @ OVERHANG — NOT TO SCALE — PLAN DETAIL

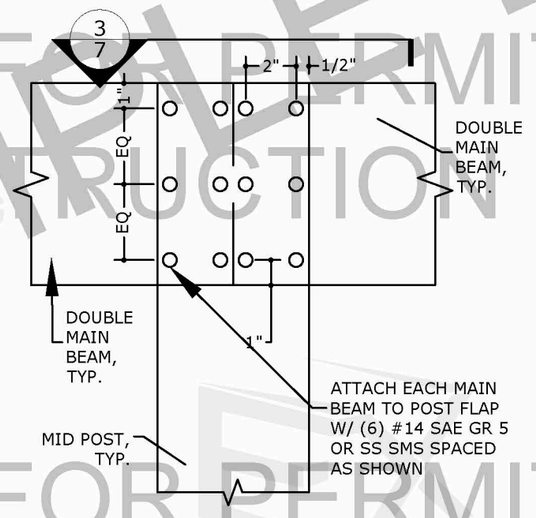


5/5 DOUBLE BEAM TO EDGE POST — NOT TO SCALE — SECTION

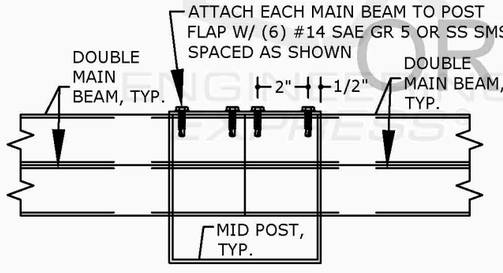


6/5 DOUBLE BEAM TO EDGE POST — NOT TO SCALE — BACK DETAIL

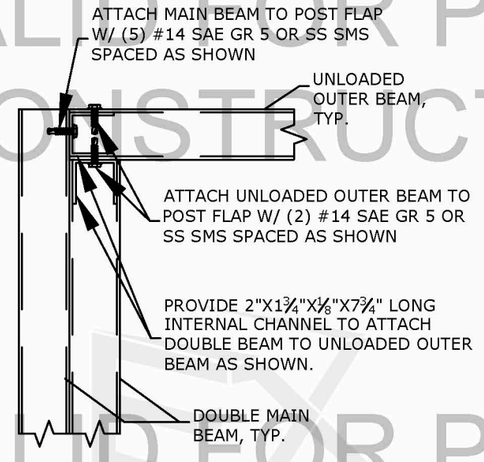


7/5 BEAM TO BEAM OVERHANG ATTACHMENT — NOT TO SCALE — PLAN DETAIL

ENGINEERING EXPRESS®
POSTAL ADDRESS:
401 W. ATLANTIC AVE R10 BOX 219
DELRAY BEACH, FL 33444
ENGINEERINGEXPRESS.COM

SUNDANCE LOUVERED ROOFS, LLC
2462 E. 6600 S
OGDEN, UT 84405
(801) 991 - 0010

HOST ATTACHED LOUVERED PERGOLA
HIGH WIND LOADING CONDITIONS
GENERAL PERFORMANCE EVALUATION

| REMARKS | DRWN | CHKD | DATE |
|---|---|---|---|
| INIT ISSUE | CCB | FLB | 11/02/22 |
| - | - | - | - |
| - | - | - | - |
| - | - | - | - |
| - | - | - | - |

THIS DOCUMENT IS THE PROPERTY OF ENGINEERING EXPRESS, AND SHALL NOT BE REPRODUCED IN WHOLE OR PART WITHOUT WRITTEN CONSENT OF ENGINEERING EXPRESS. ALTERATIONS, ADDITIONS, OR OTHER MARKINGS TO THIS DOCUMENT ARE NOT PERMITTED AND INVALIDATE OUR CERTIFICATION.

COPYRIGHT ENGINEERING EXPRESS®

22-51204

SCALE: NTS UNLESS NOTED

5 OF ©

SAMPLE

11/8/2022 3:22 PM COLBY c:\users\colby\engineering express\production - documents\projects\22-51200 sundance louvered roof\work\drawings & cad\22-51204 sundance - ha high wind pergola.dwg

# POST BASE CONNECTIONS

FOOTING SIZES & ANCHOR SPECIFICATIONS DETAILED HEREIN ARE APPLICABLE ONLY FOR HIGH WIND DESIGN CONDITIONS AS LISTED BELOW:
HOST ATTACHED SYSTEM
170 MPH ULT WIND SPEED;
MAX EXPOSURE C
10 PSF GROUND SNOW LOAD

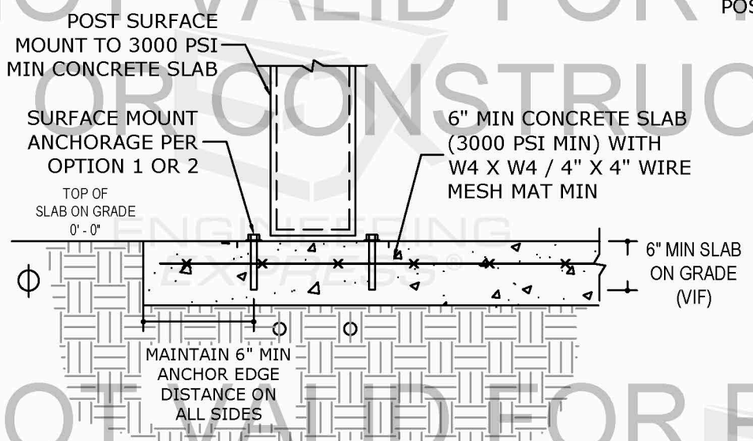


CONCRETE SLAB CONNECTION APPLICABLE FOR 4-POST HOST ATTACHED SYSTEMS WITH OR WITHOUT KNEE BRACES OF ANY SIZE

SURFACE MOUNT CONDITIONS MAY REQUIRE KNEE BRACES AT THE TOP OF EACH POST. REFER KNEE BRACE SPECIFICATION PAGE TO DETERMINE WHETHER OR NOT BRACES ARE REQUIRED.

1/6 CONCRETE SLAB SURFACE MOUNT ONLY
NOT TO SCALE — SECTION

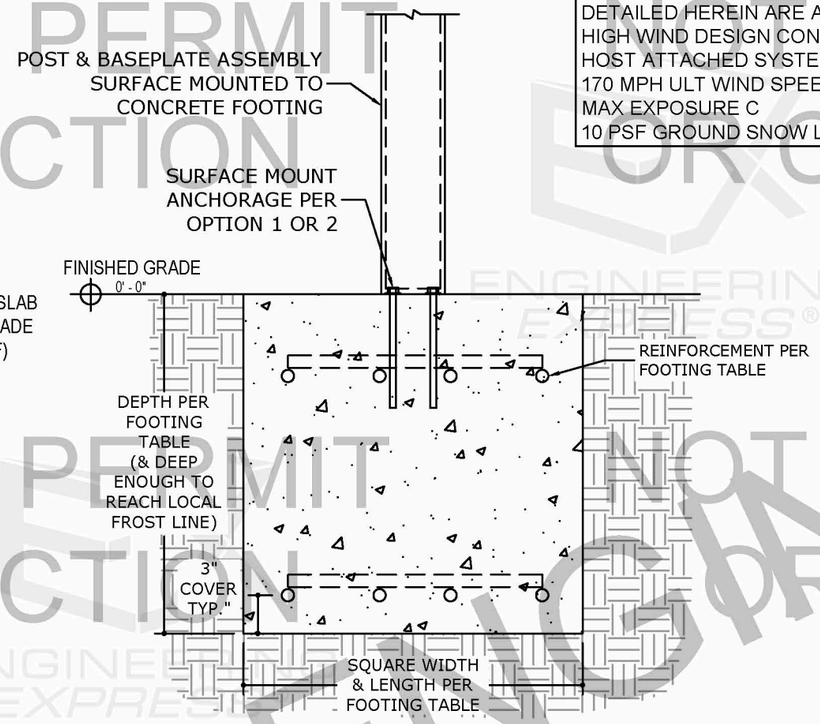


2/6 ISOLATED FOOTING WITH SURFACE MOUNT POST CONNECTION
NOT TO SCALE — SECTION

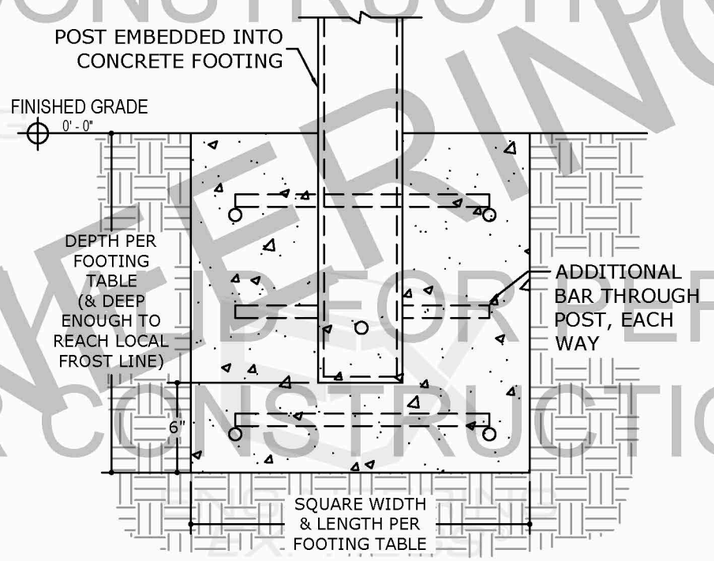


3/6 ISOLATED FOOTING WITH EMBEDDED POST CONNECTION
NOT TO SCALE — SECTION

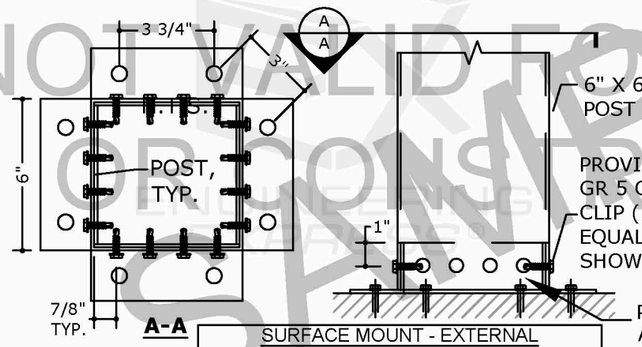


| SURFACE MOUNT - EXTERNAL REQUIRED ANCHORS | | |
|---|---|---|
| BRACING AT POST | SYSTEM HEIGHT | ANCHOR & EMBEDMENT |
| WITH KNEE BRACES | ANY HEIGHT | 3/8" DIA, DEWALT SCREW-BOLT+ @ 2" EMBED |
| WITHOUT KNEE BRACES | UP TO 10 FT | 3/8" DIA, DEWALT SCREW-BOLT+ @4.5" EMBED |
| | UP TO 12 FT | 1/2" DIA, DEWALT SCREW-BOLT+ @4.5" EMBED |

ALTERNATE ANCHORS ACCEPTABLE WITH MANUFACTURER'S EQUIVALENT SPECIFICATION SHEET, SUBMITTED AND APPROVED SEPARATELY

4/6 SURFACE MOUNT OPTION 1 EXTERNAL POST CLIPS
NOT TO SCALE — DETAIL

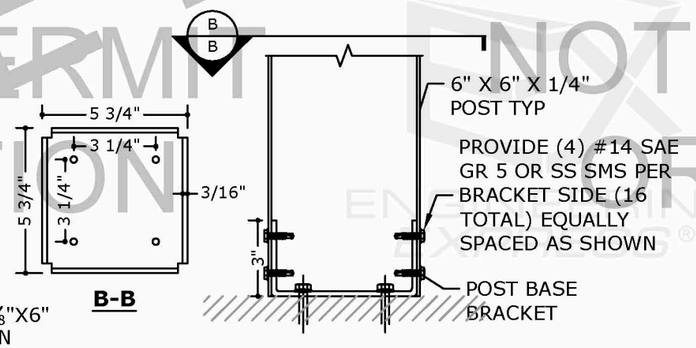


| SURFACE MOUNT - INTERNAL REQUIRED ANCHORS | | |
|---|---|---|
| BRACING AT POST | SYSTEM HEIGHT | ANCHOR & EMBEDMENT |
| WITH KNEE BRACES | ANY HEIGHT | 3/8" DIA, DEWALT SCREW-BOLT+ @ 2" EMBED |
| WITHOUT KNEE BRACES | ANY HEIGHT | NOT APPLICABLE WITHOUT BRACES |

5/6 SURFACE MOUNT OPTION 2 INTERNAL POST BASE BRACKET
NOT TO SCALE — DETAIL

| CONCRETE FOOTING & SLAB REQUIRED SIZES | | | |
|---|---|---|---|
| | POST HEIGHT | | |
| | 8 FT | 10 FT | 12 FT |
| SYSTEM SIZES | EMBED POST OR NO KNEE BRACES | | |
| UP TO: | FOOTING TYPE | | |
| 12 X 14 | D | E | E |
| 14 X 14 | D | E | F |
| 16 X 14 | D | E | F |
| 18 X 14 | E | E | F |
| 20 X 14 | E | E | F |
| 22 X 14 | E | E | F |
| | SURFACE MOUNT POST & KNEE BRACES | | |
| ANY SIZE SYSTEM: | FOOTING TYPE A OR 6" REINFORCED SLAB | | |

BOTTOM OF FOOTING DEPTH TO REACH OR EXCEED LOCAL FROST LINE. USE DEEPER FOOTINGS AS REQUIRED.

| FOOTING STYLES BY TYPE | | | | |
|---|---|---|---|---|
| TYPE | LENGTH | WIDTH | DEPTH | REINFORCEMENT |
| A | 24 IN | 24 IN | 24 IN | (3) #4, EACH WAY, TOP & BOTTOM |
| B | 30 IN | 30 IN | 18 IN | (4) #4, EACH WAY, TOP & BOTTOM |
| C | 30 IN | 30 IN | 24 IN | (4) #4, EACH WAY, TOP & BOTTOM |
| D | 36 IN | 36 IN | 18 IN | (3) #5, EACH WAY, TOP & BOTTOM |
| E | 36 IN | 36 IN | 24 IN | (3) #5, EACH WAY, TOP & BOTTOM |
| F | 36 IN | 36 IN | 30 IN | (4) #5, EACH WAY, TOP & BOTTOM |
| G | 42 IN | 42 IN | 30 IN | (4) #5, EACH WAY, TOP & BOTTOM |

SPACE RESERVED FOR DIGITAL SEAL INFORMATION
WHEN DIGITALLY SEALED, THIS NOTE SHALL BE FULLY COVERED ON SHEET 1
WHEN PRINTED OR PHYSICALLY SEALED, SEAL OF CERTIFYING ENGINEER, AND DATE OF CERTIFICATION SHALL BE SHOWN TO THE RIGHT.
IN ALL CASES, CERTIFYING ENGINEER AND CERT OF AUTH AS LISTED ON STAMP

PE SEAL REQUIRED

COPIES NOT VALID FOR PERMIT

DIGITAL SEAL NOTICE:
IF THIS DOCUMENT IS DIGITALLY SIGNED, THIS SHEET IS PART OF A DIGITALLY SIGNED FILE. IT SHALL REMAIN IN DIGITAL FORMAT, SHALL BE VERIFIED BY ELECTRONIC MEANS, & PRINTED COPIES OF THIS DOCUMENT ARE NOT CONSIDERED SIGNED AND SEALED.
PRINTED DOCUMENT NOTICE:
IF THIS DOCUMENT IS PRINTED & DOES NOT CONTAIN AN ENGINEER'S ORIGINAL SIGNATURE & SEAL, THIS DOCUMENT IS VOID & NOT VALID FOR USE. PHOTOCOPIES ARE NOT PERMITTED FOR USE.
VALID FOR 1 PERMIT ONLY U.N.O.


ENGINEERING EXPRESS®
POSTAL ADDRESS:
401 W. ATLANTIC AVE R10 BOX 219
DELRAY BEACH, FL 33444
ENGINEERINGEXPRESS.COM


SUNDANCE LOUVERED ROOFS, LLC
2462 E. 6600 S
OGDEN, UT 84405
(801) 991 - 0010

HOST ATTACHED LOUVERED PERGOLA
HIGH WIND LOADING CONDITIONS
GENERAL PERFORMANCE EVALUATION

| REMARKS | DRWN | CHKD | DATE |
|---|---|---|---|
| INIT ISSUE | CCB | FLB | 11/02/22 |


THIS DOCUMENT IS THE PROPERTY OF ENGINEERING EXPRESS, AND SHALL NOT BE REPRODUCED IN WHOLE OR PART WITHOUT WRITTEN CONSENT OF ENGINEERING EXPRESS. ALTERATIONS, ADDITIONS, OR OTHER MARKINGS TO THIS DOCUMENT ARE NOT PERMITTED AND INVALIDATE OUR CERTIFICATION.
COPYRIGHT ENGINEERING EXPRESS®


22-51204

SCALE: NTS UNLESS NOTED

6 OF 6


NOT VALID FOR PERMIT OR CONSTRUCTION
SAMPLE



11/8/2022 3:22 PM COLBY c:\users\colby\engineering express\production - documents\projects\22-51200 sundance - ha high wind pergola louvered roof\work\drawings & cad\22-51204 sundance - ha high wind pergola.dwg

# KNEE BRACE DETAIL & REQUIREMENTS

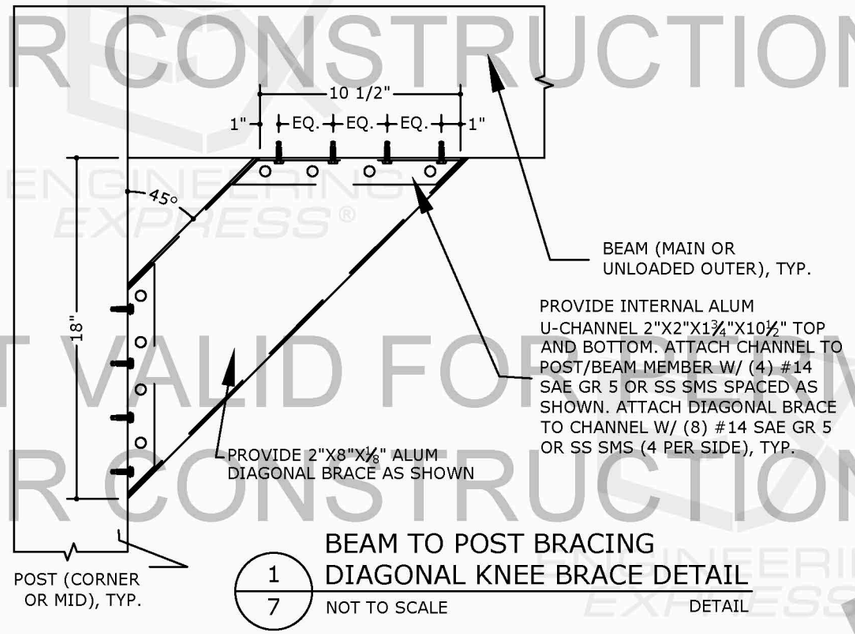


1/7 BEAM TO POST BRACING DIAGONAL KNEE BRACE DETAIL
NOT TO SCALE DETAIL

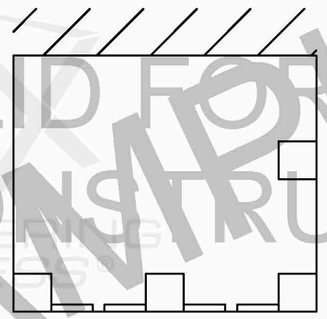

HOST-ATTACHED SYSTEM
WHERE REQUIRED, LATERAL BRACING TO BE INSTALLED AT EACH POST, **ONLY IN PARALLEL DIRECTION** TO HOST STRUCTURE
(PERPENDICULAR DIRECTION BRACING IS PERMITTED BUT OPTIONAL)

2/7 KNEE BRACING REQUIREMENTS FOR FREESTANDING PERGOLA POSTS
NOT TO SCALE DETAIL

## HOW TO DETERMINE IF POSTS REQUIRE KNEE BRACING:

USE DECISION TREE BELOW TO DETERMINE IF THE SYSTEM BEING DESIGNED REQUIRES KNEE BRACES AT EACH POST.
REFER FOOTING CONNECTION DETAILS FOR ANCHOR SIZE REQUIREMENTS.

**WHAT IS THE POST BASE CONNECTION?**

- **POST EMBEDDED IN CONCRETE FOOTING** → **BRACING NOT REQUIRED** (3/6)
- **POST IS SURFACE MOUNTED (INTERNAL BASEPLATE)** (5/6) → **BRACING ALWAYS REQUIRED FOR INTERNAL BASEPLATE SURFACE MOUNT** → **KNEE BRACING REQUIRED PARALLEL TO HOST STRUCTURE (REFER ANCHOR SCHEDULE FOR REQUIRED ANCHORS)** (2/7)
- **POST IS SURFACE MOUNTED (EXTERNAL CLIPS OR BASEPLATE)** (4/6) → **BRACING NOT REQUIRED (REFER ANCHOR SCHEDULE FOR REQUIRED ANCHORS)**

SPACE RESERVED FOR DIGITAL SEAL INFORMATION

WHEN DIGITALLY SEALED, THIS NOTE SHALL BE FULLY COVERED ON SHEET 1

WHEN PRINTED OR PHYSICALLY SEALED, SEAL OF CERTIFYING ENGINEER, AND DATE OF CERTIFICATION SHALL BE SHOWN TO THE RIGHT.

IN ALL CASES, CERTIFYING ENGINEER AND CERT OF AUTH AS LISTED ON STAMP

PE SEAL REQUIRED

COPIES NOT VALID FOR PERMIT

DIGITAL SEAL NOTICE:
IF THIS DOCUMENT IS DIGITALLY SIGNED, THIS SHEET IS PART OF A DIGITALLY SIGNED FILE. IT SHALL REMAIN IN DIGITAL FORMAT, SHALL BE VERIFIED BY ELECTRONIC MEANS, & PRINTED COPIES OF THIS DOCUMENT ARE NOT CONSIDERED SIGNED AND SEALED.
PRINTED DOCUMENT NOTICE:
IF THIS DOCUMENT IS PRINTED & DOES NOTCONTAIN AN ENGINEER'S ORIGINAL SIGNATURE & SEAL, THIS DOCUMENT IS VOID & IS NOT VALID FOR USE. PHOTOCOPIES ARE NOT PERMITTED FOR USE.
VALID FOR 1 PERMIT ONLY U.N.O.


ENGINEERING EXPRESS®
POSTAL ADDRESS:
401 W. ATLANTIC AVE R10 BOX 219
DELRAY BEACH, FL 33444
ENGINEERINGEXPRESS.COM


SUNDANCE LOUVERED ROOFS, LLC
2462 E. 6600 S
OGDEN, UT 84405
(801) 991 - 0010

HOST ATTACHED LOUVERED PERGOLA
HIGH WIND LOADING CONDITIONS
GENERAL PERFORMANCE EVALUATION

| REMARKS | DRWN | CHKD | DATE |
|---|---|---|---|
| INIT ISSUE | CCB | FLB | 11/02/22 |


THIS DOCUMENT IS THE PROPERTY OF ENGINEERING EXPRESS, AND SHALL NOT BE REPRODUCED IN WHOLE OR PART WITHOUT WRITTEN CONSENT OF ENGINEERING EXPRESS. ALTERATIONS, ADDITIONS, OR OTHER MARKINGS TO THIS DOCUMENT ARE NOT PERMITTED AND INVALIDATE OUR CERTIFICATION.

COPYRIGHT ENGINEERING EXPRESS®


22-51204

SCALE: NTS UNLESS NOTED

7 OF


SAMPLE

NOT VALID FOR PERMIT OR CONSTRUCTION



11/8/2022 3:22 PM COLBY c:\users\colby\engineering express\production - documents\projects\22-51200 sundance - ha high wind pergola.dwg

# PERGOLA COMPONENTS

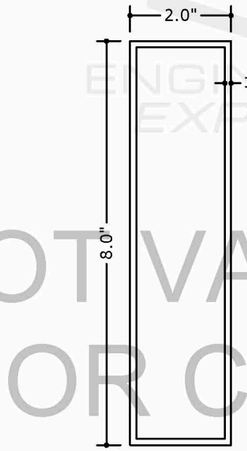


1/8 SINGLE 2" X 8" STRUCTURAL BEAM DETAIL
NOT TO SCALE

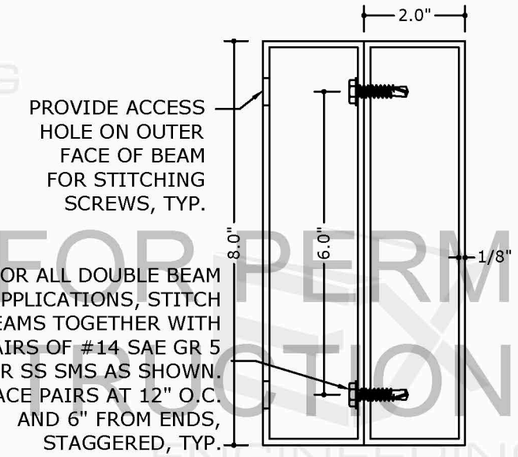


2/8 DOUBLE 2" X 8" STRUCTURAL BEAM DETAIL
NOT TO SCALE

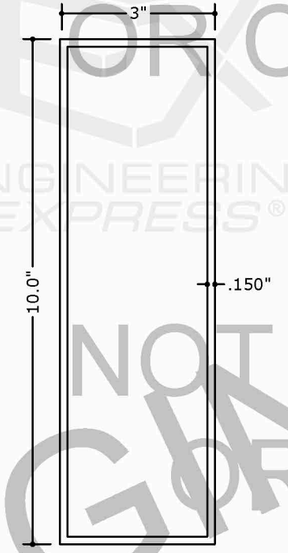


3/8 SINGLE 3" X 10" X 5/32" STRUCTURAL BEAM DETAIL
NOT TO SCALE

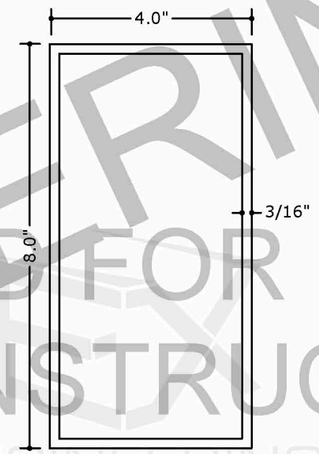


4/8 SINGLE 4" X 8" X 3/16" STRUCTURAL BEAM DETAIL
NOT TO SCALE

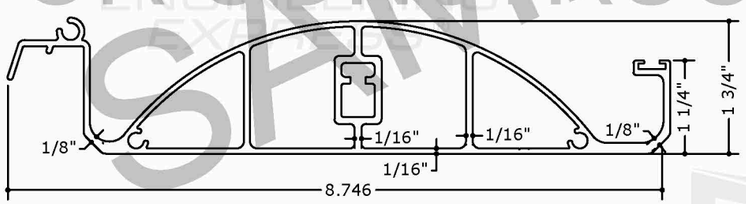


NOTE: MECHANICAL OPERATION OF THE SYSTEM NOT PART OF THIS STRUCTURAL DESIGN OR CERTIFICATION

5/8 LOUVER BLADE DETAIL
NOT TO SCALE

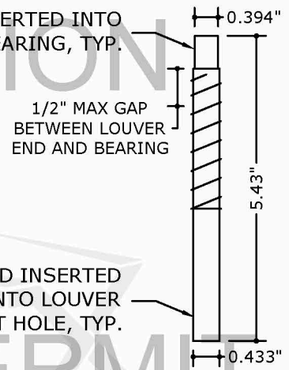


6/8 LOUVER PIN DETAIL
NOT TO SCALE

7/8 LOUVER BEARING DETAIL
NOT TO SCALE

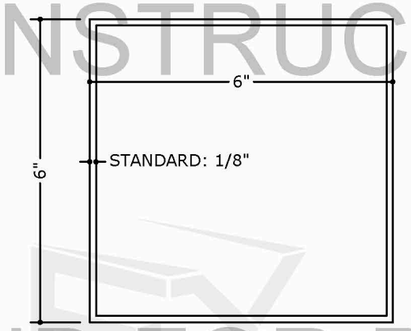


8/7 6" X 6" ALUMINUM POST STANDARD & HEAVY DUTY DETAIL
NOT TO SCALE

SPACE RESERVED FOR DIGITAL SEAL INFORMATION

WHEN DIGITALLY SEALED, THIS NOTE SHALL BE FULLY COVERED ON SHEET 1

WHEN PRINTED OR PHYSICALLY SEALED, SEAL OF CERTIFYING ENGINEER, AND DATE OF CERTIFICATION SHALL BE SHOWN TO THE RIGHT.

IN ALL CASES, CERTIFYING ENGINEER AND CERT OF AUTH AS LISTED ON STAMP

PE SEAL REQUIRED

COPIES NOT VALID FOR PERMIT

DIGITAL SEAL NOTICE:
IF THIS DOCUMENT IS DIGITALLY SIGNED, THIS SHEET IS PART OF A DIGITALLY SIGNED FILE. IT SHALL REMAIN IN DIGITAL FORMAT, SHALL BE VERIFIED BY ELECTRONIC MEANS, & PRINTED COPIES OF THIS DOCUMENT ARE NOT CONSIDERED SIGNED AND SEALED.

PRINTED DOCUMENT NOTICE:
IF THIS DOCUMENT IS PRINTED & DOES NOTCONTAIN AN ENGINEER'S ORIGINAL SIGNATURE & SEAL, THIS DOCUMENT IS VOID & NOT VALID FOR USE. PHOTOCOPIES ARE NOT PERMITTED FOR USE.
VALID FOR 1 PERMIT ONLY U.N.O.

ENGINEERING EXPRESS®
POSTAL ADDRESS:
401 W. ATLANTIC AVE R10 BOX 219
DELRAY BEACH, FL 33444
ENGINEERINGEXPRESS.COM

SUNDANCE LOUVERED ROOFS, LLC
2462 E. 6600 S
OGDEN, UT 84405
(801) 991 - 0010

HOST ATTACHED LOUVERED PERGOLA
HIGH WIND LOADING CONDITIONS
GENERAL PERFORMANCE EVALUATION

| REMARKS | DRWN | CHKD | DATE |
|---|---|---|---|
| INIT ISSUE | CCB | FLB | 11/02/22 |
| - | - | - | - |
| - | - | - | - |
| - | - | - | - |
| - | - | - | - |

THIS DOCUMENT IS THE PROPERTY OF ENGINEERING EXPRESS, AND SHALL NOT BE REPRODUCED IN WHOLE OR PART WITHOUT WRITTEN CONSENT OF ENGINEERING EXPRESS. ALTERATIONS, ADDITIONS, OR OTHER MARKINGS TO THIS DOCUMENT ARE NOT PERMITTED AND INVALIDATE OUR CERTIFICATION.

COPYRIGHT ENGINEERING EXPRESS®

22-51204

SCALE: NTS UNLESS NOTED

8 OF 8

NOT VALID FOR PERMIT OR CONSTRUCTION
ENGINEERING EXPRESS®
SIMPLE ENGINEERING

11/8/2022 3:22 PM COLBY c:\users\colby\engineering express\production - documents\projects\22-51200 sundance louvered roof\work\drawings & cad\22-51204 sundance - ha high wind pergola.dwg

# CONNECTION TO EXISTING HOST

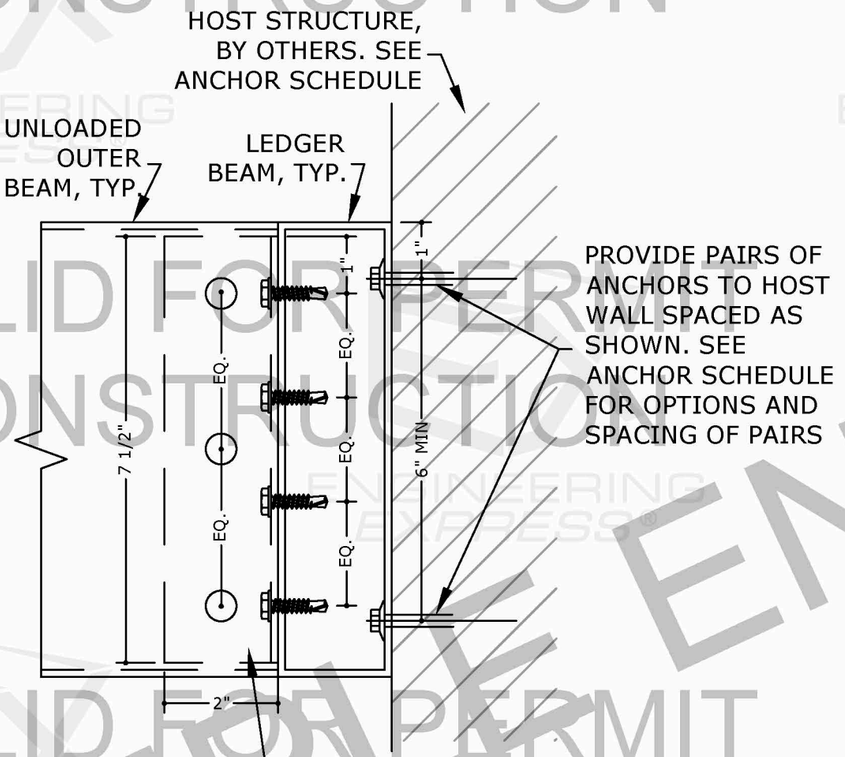


1/9 LEDGER BEAM TO EXISTING HOST
NOT TO SCALE — SECTION

## LEDGER BEAM TO HOST STRUCTURE REQUIRED ANCHORS BY HOST TYPE

**TO GROUT-FILLED CONCRETE BLOCK (ASTM C-90):**

- ¼" ITW TAPCON (OR EQUIV.) W/ 1¼" MIN. EMBEDMENT, 4" MIN. EDGE DISTANCE. SPACE PAIRS AT 10" O.C AND 5" FROM ENDS. HOLLOW BLOCK CONNECTIONS REQUIRE SITE-SPECIFIC EVALUATION.

**TO WOOD HOST STRUCTURE (G=0.55 MIN):**

- 3/8" LAG SCREWS W/ 3" MIN. THREAD PENETRATION, & 3/4" MIN. WOOD EDGE DISTANCE. SPACE GROUPS OF (2) AT 16" O.C. AND 6" MIN. FROM ENDS

**TO CONCRETE (3000 PSI MIN):**

- ¼" ITW TAPCON (OR EQUIV.) W/ 1¾" MIN. EMBEDMENT, 2½" MIN. EDGE DISTANCE. SPACE PAIRS AT 16" O.C. AND 6" MIN. FROM ENDS

## LEDGER BEAM ANCHOR NOTES

1. ANCHORS SHALL BE INSTALLED IN ACCORDANCE WITH MANUFACTURERS' RECOMMENDATIONS.
2. WOOD HOST STRUCTURE SHALL BE SOUTHERN YELLOW PINE OR DOUGLAS FIR LARCH (G = 0.49 MIN), AND SHALL NOT BE DIRECTLY EXPOSED TO WEATHERING ELEMENTS.
3. MINIMUM EMBEDMENT INTO HOST SHALL BE AS NOTED ABOVE. MINIMUM EMBEDMENT AND EDGE DISTANCE EXCLUDES STUCCO, FOAM, BRICK, AND OTHER WALL FINISHES.
4. ALL CONCRETE ANCHORS SHALL BE INSTALLED TO NON-CRACKED CONCRETE ONLY.
5. WHERE EXISTING STRUCTURE IS WOOD FRAMING, EXISTING CONDITIONS MAY VARY. FIELD VERIFY THAT FASTENERS ARE INTO ADEQUATE WOOD FRAMING MEMBERS, NOT INTO PLYWOOD.
6. HOST STRUCTURE SHALL BE ANALYZED & CERTIFIED AS SUFFICIENT TO SUPPORT THE LOADS AND REACTIONS IMPOSED BY THE STRUCTURE. APPROVAL AND CERTIFICATION OF EXISTING HOST STRUCTURE SHALL BE PERFORMED BY A LOCAL ENGINEER OF RECORD.

SPACE RESERVED FOR DIGITAL SEAL INFORMATION

WHEN DIGITALLY SEALED, THIS NOTE SHALL BE FULLY COVERED ON SHEET 1

WHEN PRINTED OR PHYSICALLY SEALED, SEAL OF CERTIFYING ENGINEER, AND DATE OF CERTIFICATION SHALL BE SHOWN TO THE RIGHT.

IN ALL CASES, CERTIFYING ENGINEER AND CERT OF AUTH AS LISTED ON STAMP

PE SEAL REQUIRED

COPIES NOT VALID FOR PERMIT

DIGITAL SEAL NOTICE:
IF THIS DOCUMENT IS DIGITALLY SIGNED, THIS SHEET IS PART OF A DIGITALLY SIGNED FILE. IT SHALL REMAIN IN DIGITAL FORMAT, SHALL BE VERIFIED BY ELECTRONIC MEANS, & PRINTED COPIES OF THIS DOCUMENT ARE NOT CONSIDERED SIGNED AND SEALED.
PRINTED DOCUMENT NOTICE:
IF THIS DOCUMENT IS PRINTED & DOES NOTCONTAIN AN ENGINEER'S ORIGINAL SIGNATURE & SEAL, THIS DOCUMENT IS VOID & NOT VALID FOR USE. PHOTOCOPIES ARE NOT PERMITTED FOR USE.
VALID FOR 1 PERMIT ONLY U.N.O.

ENGINEERING EXPRESS®
POSTAL ADDRESS:
401 W. ATLANTIC AVE R10 BOX 219
DELRAY BEACH, FL 33444
ENGINEERINGEXPRESS.COM

SUNDANCE LOUVERED ROOFS, LLC
2462 E. 6600 S
OGDEN, UT 84405
(801) 991 - 0010

HOST ATTACHED LOUVERED PERGOLA
HIGH WIND LOADING CONDITIONS
GENERAL PERFORMANCE EVALUATION

| REMARKS | DRWN | CHKD | DATE |
|---|---|---|---|
| INIT ISSUE | CCB | FLB | 11/02/22 |
| - | - | - | - |
| - | - | - | - |
| - | - | - | - |
| - | - | - | - |
| - | - | - | - |

THIS DOCUMENT IS THE PROPERTY OF ENGINEERING EXPRESS, AND SHALL NOT BE REPRODUCED IN WHOLE OR PART WITHOUT WRITTEN CONSENT OF ENGINEERING EXPRESS. ALTERATIONS, ADDITIONS, OR OTHER MARKINGS TO THIS DOCUMENT ARE NOT PERMITTED AND INVALIDATE OUR CERTIFICATION.

COPYRIGHT ENGINEERING EXPRESS®

22-51204

SCALE: NTS UNLESS NOTED

9 OF 9

SAMPLE
NOT VALID FOR PERMIT OR CONSTRUCTION
ENGINEERING EXPRESS®

11/8/2022 3:22 PM COLBY c:\users\colby\engineering express\production - documents\projects\22-51200 sundance louvered roof\work\drawings & cad\22-51204 sundance - ha high wind pergola.dwg