10" HD UNIVERSAL BUNK MASTER PLAN

Eastern Metal Supply

WORKING LOAD 15,000 LBS MAX (PER BUNK).
30,000 LBS MAX (TOTAL).
60%/40% ALLOWABLE DISTRIBUTION ALONG BUNKS
THIS MASTER PLAN DOES NOT CERTIFY LIFT

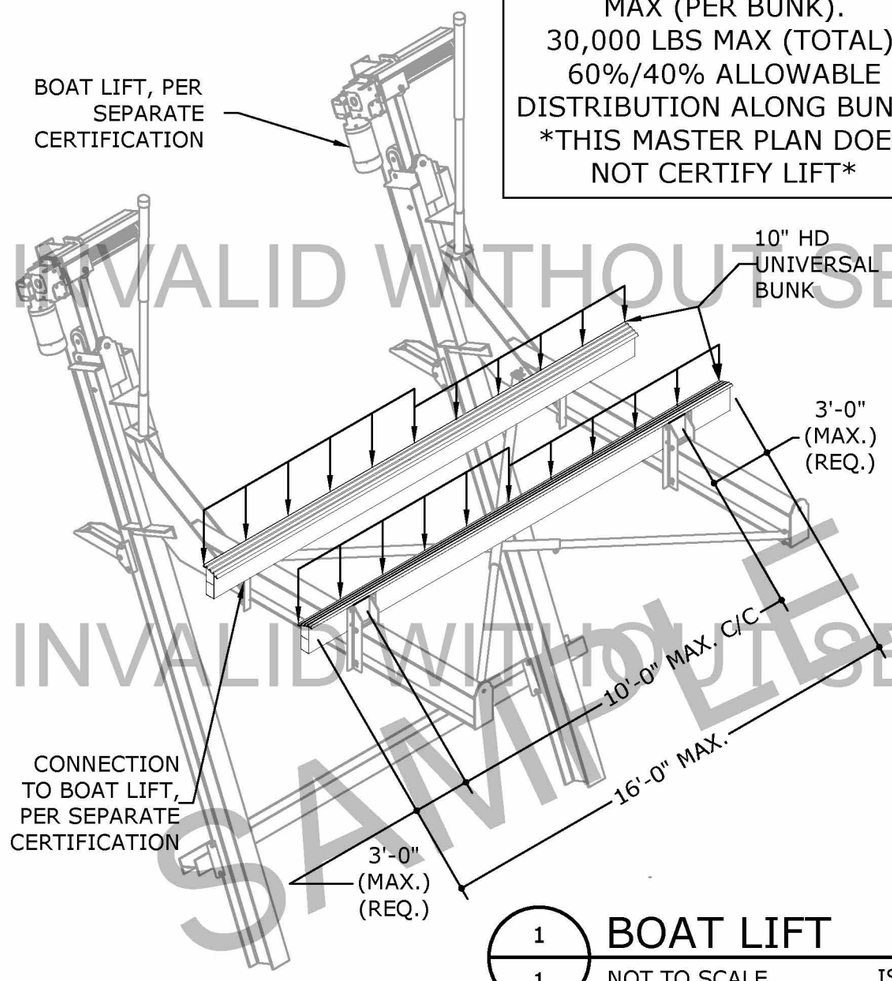

1/1 BOAT LIFT
NOT TO SCALE ISOMETRIC

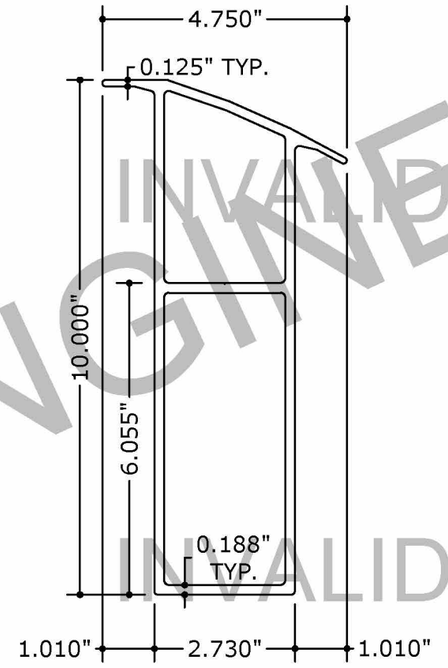

2/1 10" HD UNIVERSAL BUNK
NOT TO SCALE 6005A-T61
EMS 40-05-277

VALID AS A GENERIC SEALED MASTER PLAN ONLY FOR UP TO (1) INSTALLATION AT (1) LOCATION. SITE SPECIFIC/ADDITIONAL ENGINEERING REQUIRED THEREAFTER.

VISIT ECALC.IO/40534

FOR ENGINEER CERTIFIED ORIGINALS & MORE INFORMATION ABOUT THIS DOCUMENT OR SCAN THIS QR CODE

VISIT ENGINEERINGEXPRESS.COM/EASTERN FOR ADDITIONAL PLANS, REPORTS & RESOURCES

COPIES NOT VALID FOR PERMIT

COPIES NOT VALID FOR PERMIT

PE SEAL REQUIRED

CERTIFYING ENGINEER AND CERT OF AUTH AS LISTED ON STAMP

VALID FOR 1 PERMIT ONLY U.N.O.

DIGITAL SEAL NOTICE:
IF THIS DOCUMENT IS DIGITALLY SIGNED, THIS SHEET IS PART OF A DIGITALLY SIGNED FILE. IT SHALL REMAIN IN DIGITAL FORMAT, SHALL BE VERIFIED BY ELECTRONIC MEANS, & PRINTED COPIES OF THIS DOCUMENT ARE NOT CONSIDERED SIGNED AND SEALED.

PRINTED DOCUMENT NOTICE:
IF THIS DOCUMENT IS PRINTED & DOES NOTCONTAIN AN ENGINEER'S ORIGINAL SIGNATURE & SEAL, THIS DOCUMENT IS VOID & NOT VALID FOR USE. PHOTOCOPIES ARE NOT PERMITTED FOR USE.

ENGINEERING EXPRESS®
CORPORATE OFFICE:
160 SW 12th AVE, SUITE 106
DEERFIELD BEACH, FL 33442
(954) 354-0660 | (866) 396-9999
TEAM@ENGINEERINGEXPRESS.COM
ENGINEERINGEXPRESS.COM

DESIGN NOTES:

1. THIS SYSTEM HAS BEEN DESIGNED AND SHALL BE FABRICATED IN ACCORDANCE WITH THE REQUIREMENTS OF THE FLORIDA BUILDING CODE 7TH EDITION (2020). ALSO APPLICABLE FOR THE FBC 6TH EDITION (2017), IBC/IRC (2015 & 2018), AS WELL AS CURRENT VERSIONS OF THE MN, NC, NJ, NY, OH, SC, & VA BUILDING CODES AS APPLICABLE. CODE ENFORCED COMPLIES WITH STATE OF SEAL AND IF MULTIPLE VERSIONS ARE LISTED THEN MOST STRINGENT APPLIES. DESIGN SHALL UTILIZE ASD DESIGN METHOD USING ASCE 7-16 OR ASCE 7-10 CODES FOR SITE SPECIFIC APPLICATIONS AS APPLICABLE.
2. ALL ALUMINUM SHALL BE 6005A-T61 ALLOY AND TEMPER. EXTRUSION TOLERANCES TO BE PER INDUSTRY STANDARDS.

GENERAL NOTES

3. **CONTRACTOR SHALL INVESTIGATE AND CONFORM TO ALL LOCAL BUILDING CODE AMMENDMENTS WHICH MAY APPLY. DESIGN CRITERIA BEYOND AS STASTATED HEREIN MAY REQUIRE ADITIONAL SITE-SPECIFIC SEALED ENGINEERING.**
4. **THIS DOCUMENT IS ONLY VALID WITH ORIGINAL SIGNATURE AND SEAL OF A P.E. OF THIS FIRM. ALTERATIONS, ADDITIONS OR OTHER MARKINGS TO THIS DOCUMENT ARE NOT PERMITTED AND INVALIDATE OUR CERTIFICATION.**
5. THE ARCHITECT/ENGINEER OF RECORD FOR THE PROJECT SUPERSTRUCTURE WITH WHICH THIS DESIGN IS USED SHALL BE RESPONSIBLE FOR THE INTEGRITY OF ALL SUPPORTING SURFACES TO THIS DESIGN WHICH SHALL BE COORDINATED BY THE PERMITTING CONTRACTOR.
6. SEPARATE 'SITE-SPECIFIC' SEALED ENGINEERING SHALL BE REQUIRED IN ORDER TO DEVIATE FROM LOADS CONTAINED HEREIN. LINEAR INTERPOLATION OF THE ALLOWABLE SPAN TABLES LISTED HEREIN SHALL NOT BE PERMITTED. CONTACT THIS ENGINEER FOR ALTERNATE SPAN CALCULATIONS AS MAY BE REQUIRED.
7. THE CONTRACTOR SHALL CAREFULLY CONSIDER POSSIBLE IMPOSING LOADS ON HOST STRUCTURE, INCLUDING BUT NOT LIMITED TO ANY CONCENTRATED LOADS WHICH MAY JUSTIFY GREATER DESIGN CRITERIA. THIS ADDITIONAL LOAD CRITERIA SHALL BE PROPERLY ANALYZED BY A LICENSED ENGINEER OR REGISTERED ARCHITECT.
8. THE CONTRACTOR IS RESPONSIBLE TO INSULATE ALL MEMBERS FROM DISSIMILAR MATERIALS TO PREVENT ELECTROLYSIS.
9. THE SYSTEM DETAILED HEREIN IS GENERIC AND DOES NOT PROVIDE INFORMATION FOR A SPECIFIC SITE. FOR SITE CONDITIONS DIFFERENT FROM THE CONDITIONS DETAILED HEREIN, A LICENSED ENGINEER OR REGISTERED ARCHITECT SHALL PREPARE SITE SPECIFIC DOCUMENTS FOR USE IN CONJUNCTION WITH THIS DOCUMENT.
10. ENGINEER SEAL AFFIXED HERE TO VALIDATES STRUCTURAL DESIGN AS SHOWN ONLY. USE OF THIS SPECIFICATION BY CONTRACTOR, et. al. INDEMNIFIES & SAVES HARMLESS THIS ENGINEER FOR ALL COST & DAMAGES INCLUDING LEGAL FEES & APPELLATE FEES RESULTING FROM MATERIAL FABRICATION, SYSTEM ERECTION, & CONSTRUCTION PRACTICES BEYOND THAT WHICH IS CALLED FOR BY LOCAL, STATE, & FEDERAL CODES & FROM DEVIATIONS OF THIS PLAN.
11. EXCEPT AS EXPRESSLY PROVIDED HEREIN, NO ADDITIONAL CERTIFICATIONS OR AFFIRMATIONS ARE INTENDED.
12. ALTERATIONS, ADDITIONS, OR OTHER MARKINGS TO THIS DOCUMENT ARE NOT PERMITTED AND INVALIDATE THIS CERTIFICATION.

EASTERN METAL SUPPLY
4268 WESTROADS DR
WEST PALM BEACH, FL 33407
(800)432-2204

10" HD UNIVERSAL BUNK MASTER PLAN
FLORIDA BUILDING CODE 7TH ED (2020)
INTERNATIONAL BUILDING CODE (2018)

REMARKS	DRWN	CHKD	DATE
INITIAL ISSUE	ZAR	FLB	4/18/19
2020 FBC	COB	FLB	5/17/19
-	-	-	-
-	-	-	-
-	-	-	-

THIS DOCUMENT IS THE PROPERTY OF ENGINEERING EXPRESS, AND SHALL NOT BE REPRODUCED IN WHOLE OR PART WITHOUT WRITTEN CONSENT OF ENGINEERING EXPRESS. ALTERATIONS, ADDITIONS, OR OTHER MARKINGS TO THIS DOCUMENT ARE NOT PERMITTED AND INVALIDATE OUR CERTIFICATION.

COPYRIGHT ENGINEERING EXPRESS®

21-40543

SCALE: NTS UNLESS NOTED

1 OF 1

INVALID WITHOUT SEAL
SAMPLE ENGINEERING

C:\Users\colby\Engineering Express\Production - Documents\Projects\21-40534 EMS- 10in HD Universal Bunk\Drawings & CAD\21-40534b 10 HD Universal Bunk.dwg
06/23/2021 - 4:02pm colby