Proc. of The Fifth Intl. Conf. On Advances in Mechanical, Aeronautical and Production Techniques - MAPT 2016
Copyright © Institute of Research Engineers and Doctors, USA .All rights reserved.
ISBN: 978-1-63248-090-3 doi: 10.15224/ 978-1-63248-090-3-43

A Computation of Consumption Power of Single Point Incremental Forming Technology

LE Khanh Dien, NGUYEN Tan Hung, LE Khanh Tan, LE Thanh Son, NGUYEN Thanh Nam

Abstract: From the recent decade, Single Point Incremental Forming (SPIF) [1] has been a new forming sheet technology in industry. However, there are a few of studies in theoretical researches and the formulas of stresses of formed sheet in [2] could not convince the mechanic of breaking of the workpiece sheet. In this paper, we proposed a new computation in pure analytics of normal stresses that are based on the strains and stresses of Ludwig's formula. The formulas of stresses are in accordance with the mechanics of breaking sheet and are mentioned in [4]. The paper displays also the computation of forming forces, torques and consumption power. The analytical results are partly compared to the result of simulation and experiment with a small difference that proves the reliability of the formula.

The proposed results of this paper could assist technicians to select suitable SPIF machine, tools to a given workpiece sheet material machine to avoid out of order when forming sheets by SPIF technology.

Keywords— Single Point incremental Forming (SPIF), normal stresses, strains, simulation, consumption power, analytical formula.

I. *Introduction*

ISF (Incremental Sheet Forming) technology, a new dieless forming sheet technology that was recommended by E. Leszak [1], is composed of 2 methods: SPIF (Single Point Incremental Forming) and TPIF (Two Point Incremental Forming). To now on, there are too few analytic researches of strength of material sheets in SPIF and the most recent one is mentioned in [2]. However, the proposed normal stresses at a random tiny contact area of the sheet workpiece are constant to the depth of the tool and could not explain the reason of leak of workpiece sheet in reality experiment:

LE Khanh Dien *(Author)*
The Hochiminh City University of Technology, HCMUT, Vietnam

NGUYEN Tan Hung
Digital Control and System Engineering Laboratory, DCSElab
Vietnam

LE Khanh Tan
HCM City University of Technology and Education, HCMUTE
Vietnam

LE Thanh Son
Digital Control and System Engineering Laboratory, DCSElab
Vietnam

NGUYEN Thanh Nam
Digital Control and System Engineering Laboratory, DCSElab
Vietnam

$$\sigma_\phi = \sigma_1 = \frac{\sigma_Y . r_{tool}}{t + r_{tool}} > 0$$
$$\sigma_t = \sigma_3 = -\frac{\sigma_Y . t}{t + r_{tool}} < 0 \qquad (1)$$
$$\sigma_\theta = \sigma_2 = \frac{1}{2}(\sigma_1 + \sigma_3) = \frac{\sigma_Y}{2}\left(\frac{-t + r_{tool}}{t + r_{tool}}\right)$$

Herein:

- σ_y is the Yield stress of sheet workpiece, it is constant and depends on the characteristic of sheet material,
- σ_y is the Yield stress of sheet workpiece, it is constant and depends on the characteristic of sheet material,
- r_{tool} is radius of spherical tip of no cutting edges tool.
- t is the thickness of the sheet workpiece.

In examination the above formula (1) of [2] we could find out some important problems:

-The stresses at a random point are always constant and equal the 3 principal stresses so they are independent to the position of the tool on the sheet workpiece that could not explain the reason of breaking of the worksheet

-In calculating the partial differential of thickness t of 3 elements of stresses in (1) we have result:

$$\frac{\partial \sigma_\phi}{\partial t} = \frac{-\sigma_Y . r_{tool}}{(t + r_{tool})^2} < 0$$
$$\frac{\partial \sigma_t}{\partial t} = -\frac{\sigma_Y . r_{tool}}{(t + r_{tool})^2} < 0 \qquad (2)$$
$$\frac{\partial \sigma_\theta}{\partial t} = -\frac{\sigma_Y r_{tool}}{(t + r_{tool})^2} < 0$$

That means that all 3 elements of stresses are reversed to the thickness t of the sheet workpiece. So when the thickness of workpiece increases, all stresses as well as forming force and consuming power will decrease. This paper attempts to recommend a new accuracy computing of stresses by pure analytics formula that is based on Ludwik's formula and then check the results by Abaqus a FEM software.

II. A Recommended Analytics Model Of Computing Stresses in SPIF

This paper recommends a new computation of stresses by analytics way that is based on Ludwik's formula, the forces, moment and consumption power with a proposed model in figure 1 and 2 with the initial assumptions:

- Spherical tip of forming tool is absolute rigid to keep its initial geometric shape under interactive forces.

-A tiny layer of lubrication exists between tool tip and sheet workpiece surface for keeping a small constant coefficient of friction f.

SEEK DIGITAL LIBRARY

Proc. of The Fifth Intl. Conf. On Advances in Mechanical, Aeronautical and Production Techniques - MAPT 2016
Copyright © Institute of Research Engineers and Doctors, USA .All rights reserved.
ISBN: 978-1-63248-090-3 doi: 10.15224/ 978-1-63248-090-3-43

-In figure 2, M is a random initial point in the medium layer of the sheet. When the sheet is deformed, M displaces to M' that is also on this medium layer of the sheet. This layer is deformed to a spherical surface that is parallel to the one of the tool.

-The coordinate system OXYZ is places at the center O of the tool wherein OY axis is perpendicular to the surface of the figure. M and M' are on the same line OM' that makes with the OZ axis an angle COM=φ. T_i is initial thickness of the sheet and tφ is the one at M'. A differential cube at M' has 6 planes that are parallel to the 3 main planes of the coordinate system: Horizontal plane XOY, Frontal plane XOZ and profile plane YOZ. On each plane, we calculate the displacement, strain and stress via Ludwik's formula

$$\sigma_P = K\varepsilon_P{}^n$$

Wherein: K: Yielding coefficient of sheet material, n: Exponent value of plastic curve.

A. In Horizontal plane OXY: M is located by angle COM=φ on the circumference of circle (H, r=HM), the initial l_0 is the circumference of (H, r=MH) is the initial length in this plane:

$$l_0 = 2\pi.r = 2\pi(\frac{t+D-2h}{2}).tg\varphi \quad l' = 2\pi\frac{D+t\cos\varphi}{2}.\sin\varphi$$

$$\Rightarrow \quad \varepsilon_p = \ln\frac{l'}{l_0} = \ln(\frac{t.\cos^2\varphi + D.\cos\varphi}{t+D-2h})$$

$$\Rightarrow \quad \sigma_P = K\ln^n(\frac{D+t-2h}{D.\cos\varphi + t.\cos^2\varphi}) \qquad (3)$$

Because of D>2h, cosφ>0, t>0 and ε_p>0 so:

$$\frac{\partial\sigma_P}{\partial t} = n.K\frac{\cos\varphi(D(1-\cos\varphi)+2h\cos\varphi)}{(t+D-2h)(t.\cos^2\varphi + D.\cos\varphi)}\ln^{n-1}(\frac{t+D-2h}{t.\cos^2\varphi + D.\cos\varphi}) > 0$$

σ_P is proportional to the thickness t of the sheet.

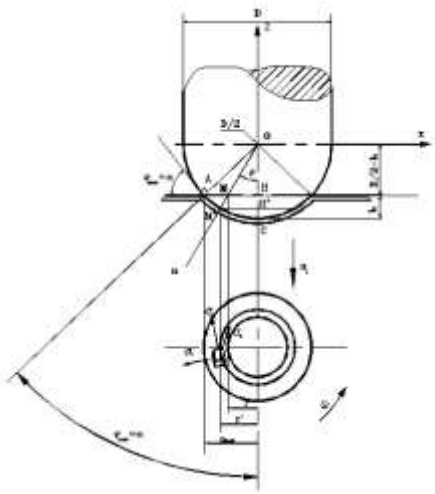

Fig. 1: Model of computation of normal stresses in SPIF

B. In Frontal plane XOZ:

With the same way to compute strain and stress with initial and deformed lengths:

$$l_0 = OH.tg\varphi = (\frac{D}{2}+\frac{t}{2}-h).tg\varphi = \frac{D+t-2h}{2}tg\varphi$$

$$l' = M'C = \frac{D+t\cos\varphi}{2}\varphi$$

Strain: $\varepsilon_t = \ln\frac{l'}{l_0} = \ln(\frac{(t.\cos\varphi + D)\varphi}{(t+D-2h)tg\varphi})$ Stress:

$$\sigma_t = K\ln^n(\frac{(t\cos\varphi + D)\varphi}{(t+D-2h)tg\varphi}) \qquad (4)$$

$$\frac{\partial\sigma_t}{\partial t} = Kn(\frac{D(\cos\varphi-1)-2h\cos\varphi}{(t+D-2h)tg^2\varphi(t\cos\varphi+D)}\ln^{n-1}(\frac{(t\cos\varphi+D)\varphi}{(t+D-2h)tg\varphi}) < 0$$

σ_t is inverse to the thickness t of the sheet.

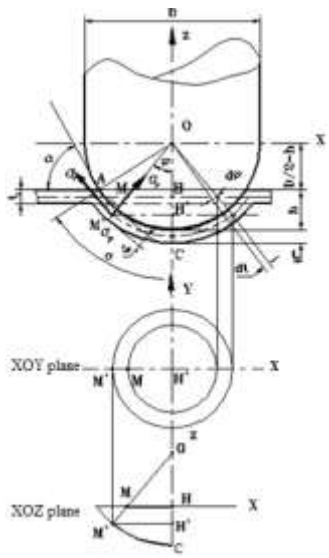

Fig. 2: Deformation of sheet workpiece in reference planes

C. In Profile plane YOZ

Strain in r-plane: $\varepsilon = \ln\frac{l'}{l_0} = \ln\frac{t_i\cos\varphi}{t_i} = \ln(\cos\varphi)$ (5)

Strain in r-plane $\sigma_r = K\ln^n(\cos\varphi) \quad \Rightarrow \frac{\partial\sigma_r}{\partial t} = 0$

σ_r is independent to the thickness t of the sheet workpiece

So the all normal stresses (3), (4) and (5) have a complicated relation to the thickness t of the sheet, it could not be always inverse to the thickness of the sheet as in the result of (1) and all of them are depended on the position φ of the contact point of the tool and the sheet.

III. Computation of Forming Forces, Torques and Consumption Power

Based on the results of stresses, we could calculate Forces, torques and consumption power with initial assumptions and included parameters:

-Tangent stresses cause only the deformation of the material and only normal stresses generate and balance with the outside forces,

-f: coefficient of friction between tool and material sheet,

SEEK DIGITAL LIBRARY

Proc. of The Fifth Intl. Conf. On Advances in Mechanical, Aeronautical and Production Techniques - MAPT 2016
Copyright © Institute of Research Engineers and Doctors, USA .All rights reserved.
ISBN: 978-1-63248-090-3 doi: 10.15224/ 978-1-63248-090-3-43

- n: Revolution per minute of the spindle of SPIF machine (of the tool)

A. Computation of vertical F_Z applied on the tool

Project all the normal stresses applied on the contact surface to z direction in fig. 3a:

$$F_Z = \int_S (\sigma_r \cos\varphi + \sigma_r . f . \sin\varphi + \sigma_t \sin\varphi) ds$$

$$F_Z = \pi \frac{D^2}{2} \int_0^{\alpha} (\sigma_r \cos\varphi + \sigma_r . f . \sin\varphi + \sigma_t \sin\varphi) \sin\varphi . \cos\varphi . d\varphi$$

$$F_Z = \pi \frac{D^2}{2} \left(\int_0^{\alpha} \sigma_r \cos^2\varphi \sin\varphi . d\varphi + \int_0^{\alpha} \sigma_r . f . \sin^2\varphi . \cos\varphi . d\varphi + \int_0^{\alpha} \sigma_t \sin^2\varphi \cos\varphi . d\varphi \right) \quad (6)$$

At the tip of the tool (φ=0) replace (2), (3) and (4) to (5):

$$F_Z = \pi \frac{K.D^2}{2} \int_0^{\arccos\left(\frac{D-2h}{D}\right)} \{ (K.(\ln(\cos x))^n \cos^2\varphi \sin\varphi) + f.(\ln(\cos x)^n . \sin^2\varphi . \cos\varphi) + \ln(\frac{\varphi}{tg\varphi})^n \sin^2\varphi \cos\varphi \} d\varphi$$

(7)

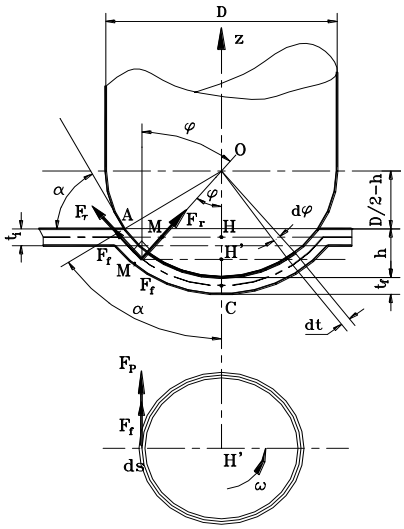

a/-

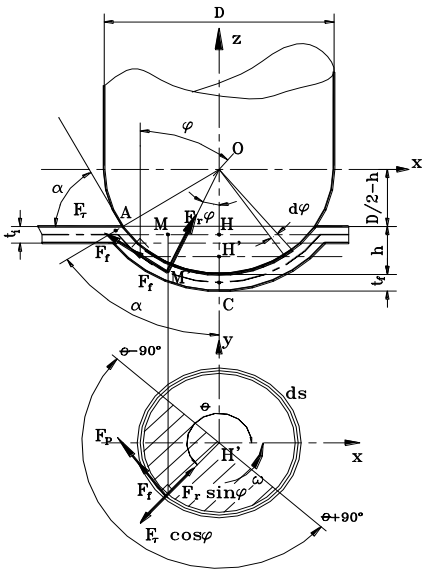

b/-

Figure I : Schema of computing of forces, torque and power in:

a: vertical feeding of the tools S_z

b: horizontal feeding of the tools S_v

B. Computation of horizontal forces F_x and F_y

These forces are generated when tool moves $S_v = \sqrt{S_X^2 + S_Y^2}$ in horizontal plane XOY with the contact area is one half of case of vertical feeding (fig. 3b) with the velocity of Sx and Sy in θ direction on the horizontal plane. The components of Fx, Fy are computed, vertical Fz is equal to ½ value in (7) because of the contact area is still equal to ½ spherical areas:

The component f.dFP exists because of the rotation of the tool:

$$dF_X(\theta) = dF_r \sin\varphi . \cos\theta - dF_t \cos\varphi . \cos\theta - (dF_P + f . dF_r) \sin\theta$$

$$dF_Y(\theta) = dF_r \sin\varphi . \sin\theta - dF_t \cos\varphi . \sin\theta - (dF_P + f . dF_r) \cos\theta$$

Solving the above integrals and computing the maximum values of Fx and Fy:

-At θ=0 or θ=180^0:

$$F_{X\max} = F_X(0) = \pi . K . D^2 \int_0^{\arccos\left(\frac{D-2h}{D}\right)} (\sin^2\varphi \cos\varphi (\ln(\cos(x)))^n + \sin\varphi . \cos^2\varphi (\ln(\frac{\varphi}{tg\varphi}))^n) d\varphi \quad (8)$$

-At θ=90^0 or θ=270^0:

Proc. of The Fifth Intl. Conf. On Advances in Mechanical, Aeronautical and Production Techniques - MAPT 2016
Copyright © Institute of Research Engineers and Doctors, USA .All rights reserved.
ISBN: 978-1-63248-090-3 doi: 10.15224/ 978-1-63248-090-3-43

$$F_{Y\max} = F_Y(\frac{\pi}{2}) = \pi.K.D^2 \int_0^{\arccos\left(\frac{D-2h}{D}\right)} \{\sin\varphi.\cos^2\varphi(\ln(\frac{\varphi}{tg\varphi}))^n) - \sin^2\varphi.\cos\varphi(\ln(\cos(\varphi)))^n\}d\varphi \quad (9)$$

C. Computation of Torque and Consumption Power

In the figure 3, the radial force F_r and tangent force F_t do not generate torques but the circumference force F_P and friction force F_f caused by radial force F_r did. Differential of torque: $dM = (\sigma_P + f.\sigma_r)r.ds$ with $r = \frac{D}{2}\sin\varphi$ so:

$$M = \frac{\pi K D^3}{4} \int_0^{\arccos\left(\frac{D-2h}{D}\right)} \{\sin^2\varphi.\cos\varphi.(\ln(\frac{D+t_i-2h}{D.\cos\varphi + t_i.\cos^2\varphi}))^n + f.(\ln(\cos\varphi))^n.\sin^2\varphi.\cos\varphi\}d\varphi \quad (10)$$

Power of the tool:

With the angular velocity of the tool is ω and the feeding rate is S_Z the forming. The formula of power is:

$$P = M\omega + F_X S_X + F_Y S_Y + F_Z.S_Z \quad (11)$$

Wherein S_X, S_Y, S_Z are feeding rates of the tool from 3 directions, normally S_Z=0 when tool moves around the circumference in plane xoy.

IV. Checking the theoritical results

A. By experiment

The following table shows all the parameters of experiment SPIF

TABLE: POWER OF VERTICAL FEEDING IN A SPECIFIC CASE:

Young's modulus of aluminum sheet A1050-H14	E= 69 Gpa= 69.10 9 N/m2
Poisson 's coefficient	ν=0.33
Yield stress	σ_Y=103Mpa=103.106N/m2
Initial thickness of sheet	t=0.001m
Vertical feeding rate per circumference of tool orbit	S_Z=0.001m
Diameter of HSS tool	D=0,01m
Coefficient friction of HSS tool and aluminium sheet	f=0,03 (good lubrication)
Revolution of spindle/ angular velocity of spindle	N=1800 RPM, ω=188.4 rad/s
Horizontal feeding rate of tool in X direction	Sx= 5m/min =0.083 m/s
Horizontal feeding rate of tool in Y direction	Sy =5m/min =0.083 m/s
Vertical feeding rate perpendicular to plane XOY	Sz =0.001mm

Apply (11) and related formulas (7), (8) and (9) in specified direction of forming we have the result of the computation

(11) ⇒ P=0.44048 kW in vertical feeding

(11)⇒ P=2.156kW when tool moves in direction Y ($\theta=90^0$) and P=1.018kW when tool moves in direction x ($\theta=0^0$)

The maximum value of empirical power when forming aluminum sheet A1050-H14 by SPIF machine in DCSElab with the same parameters is:

P= 0.457 kW in Z direction,

P= 2.267 kW in Z direction, (9)

P= 1.027 kW in Z direction,

The difference between theoretical and empirical results is under 5.2%

Figure 4: SPIF machine in DCSElab, C1 workshop of the Hochiminh City University of Technology.

Figure 5: A model of SPIF is being machined in specified features in SPIF machine.

Proc. of The Fifth Intl. Conf. On Advances in Mechanical, Aeronautical and Production Techniques - MAPT 2016
Copyright © Institute of Research Engineers and Doctors, USA .All rights reserved.
ISBN: 978-1-63248-090-3 doi: 10.15224/ 978-1-63248-090-3-43

Figure 6: Values of power of 3 spindles of SPIF machine are represented in the panel monitor.

B. By simulation of FEM software

Although Abaqus software could not show the power of forming sheet while simulation but the selections of the same parameters of practice are always need for checking the stresses as in the following figures.

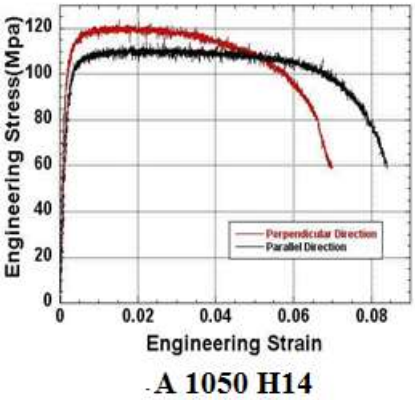

Figure 7: Properties of aluminum A [8]

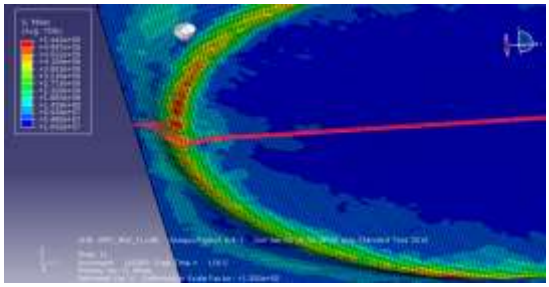

Figure 8: Values of stresses in A 1050 H14 worksheet while simulation process

Conclusion

The paper recommended the theoritical formulas of computation normal stresses in worksheet material that is more logical the current ones. These recommended stresses could explain the breaking mechanics of sheet when forming by SPIF technology. The results are compares with the empirical practice and simulation process with the acceptable differences.

Acknowledgment

We appreciate highly the very great assistance in materials and in finance of DCSELAB that helped us to perform all the empirical practice and simulation processes.

References

[1] Leszak, E., 1967 Patent: "Apparatus and process for incremental dieless forming". United States Patent Office. Patent number 3,342,051 pp1,2. 1967

[2] P.A.F. Martins, N.Bay, N.B Silva, M Skjoedt, "Theory of Single Point Incremental Forming", CIRP Annals - Manufacturing Technology 57, pp 247–252 (2008)

[3] W.C. Emmens, G. Sebastiani, A.H. Van Den Boogaard "The technology of Incremental Sheet Forming-A brief review of history", pp 8,9,10 2010

[4] Le Khanh Dien, Nguyen Thanh Nam, Nguyen Thien Binh "A recommendation of computation of normal stresses in single point incremental forming technology" 8th SEATUC Symposium, UTM INTERNATIONAL, Johor Bahru, Universiti Teknologi Malaysia, ISBN 978-967-12214-1-9, [OS05] pg 18-21

[5] Jacob Lubliner, "Plasticity theory", Maxwell Macmillan International, pp 103, 104,105, 2009

[6] J. Jeswiet, F. Micari, G. Hirt, A. Bramley, J. Duflou5, J. Allwood "Asymmetric Single Point Incremental Forming of Sheet Metal" Springer 2005

[7] http://www.Matweb.com/ reference/aluminum.aspx

[8] ASM International Atlas of stresses-strains curves 2 edition, copyright of ASM International 2002

About Author (s):

LE Khanh Dien, Engineer of Mechanical Engineering (1982), Master of Mechanical Engineering (1997), Lecturer of Faculty of Mechanical Engineering of HCM City University of Technology (HCMUT), Doctoral Student since 2008

NGUYEN Thanh Nam, B.E. (1982), Ph.D. (1990) in Bulgaria
Professor of National University of Ho Chi Minh, Director of DCSELAB, National University

SEEK DIGITAL LIBRARY